EMEA Supplies ZipShip Catalogue

September 2022

ZipShip Price List Index

Samples

Industrial - Direct Thermal Media

Z-Perform 1000D

Z-Select 2000D

Packing Slip Solution - Z-Slip

Industrial - Thermal Transfer Media

Z-Perform 1000T

Z-Select 2000T

8000T All Temp

Z-Perform 1000T 190 Tag

PolyE 3100T Gloss

PolyO 3100T

PolyPro 3000T Gloss

Z-Ultimate 3000T White

Z-Ultimate 3000T Silver

8000T Cryocool

8100T Cryocool

8100T Z-Destruct PE

8000T Void Matte

PolyPro 4000T Matte

8000T Extra Tuff 180 Tag

Desktop - Direct Thermal Media

Z-Perform 1000D

Z-Select 2000D

Z-Select 2000D Removable

Z-Perform 1000D 80 Receipt

Z-Select 2000D 190 Tag

8000D Jewelry

8000D Linerless

Desktop - Thermal Transfer Media

Z - Perform 1000T

Z-Select 2000T

PolyE 3100T Gloss

PolyPro 3000T Clear

PolyPro 3000T Gloss

Z-Ultimate 3000T White

Z-Ultimate 3000T Silver

8000T Blood Bag Deep Freeze

8000T Primary Blood Bag

PolyPro 4000T Matte

8100T Cryocool

8000T Cryocool

8000T Lab Resist

Mobile Printers

Receipts for EZ printers

Receipts for MZ printers

Receipts for RW printers

Receipts for ZQ110 printer

Media for ZQ300 Series printers

Labels for P4T/ RP4T printers

Media for QL / ZQ600 Series printers

Media for ZQ500 Series printers

Kiosk Printer

Receipts for Kiosk printers

ZipShip Kits

Industrial & Desktop Kits

Wristbands

Healthcare Wristbands

Rolls***** OR ***** Cartridges

Hospitality Wristbands

Rolls***** OR ***** Cartridges

EaziPrice Price List Index

EP Zebra Engine

EP Industrial

EP Desktop

Ribbons

Sample Ribbons

Industrial Ribbons

1600 Economy Wax

2300 European Wax

2100 High Performance Wax

5319 Performance Wax

3400 High Performance Wax/Resin

3200 Premium Wax/Resin

4800 Performance Resin

5095 High Performance Resin

5100 Premium Resin

Image Lock Resin (for 8000T Lab Resist & Z-Xtreme 5000T labels)

Desktop Printers

Cartridges for ZD420 Printer

4" printers - 2300, 3300, 3200, 5095

2" printers - 2300 Wax, 3200 Wax/Resin, 5095 Resin

Image Lock Resin

(for 8000T Lab Resist & Z-Xtreme 5000T labels)

Ribbons for P4T/RP4T printer

900m Ribbons

2300 European Wax

300m Ribbons

Ribbons for ZT printers

Ribbons for GT800 & ZD printers

Ribbons for GT800 & ZD printers

Coloured Ribbons

Coloured Ribbons

ChemResist Ribbon

Industrial / Desktop ChemResist

Return to Index

Zebra Printer Specifications - Labels

Printer Type	Printer	Core Size	Max Roll OD	Min Label Width	Max Label Width*	Min Label Thickness	Max Label Thickness
Print Engines	110PAX4	Applicator Dependant		16mm	114mm	0.148mm	0.254mm
	170PAX			76mm	180mm	0.076mm	0.305mm~~
	ZE500-4			16mm	114mm	0.135mm	0.254mm
	ZE500-4R			16mm	114mm	0.135mm	0.254mm
	ZE500-6			76mm	180mm	0.076mm	0.305mm
	ZE500-6R			76mm	180mm	0.076mm	0.305mm
High-End / Mid-Range	ZM400	76mm	200mm	25.4mm	114mm	0.058mm	0.25mm
	ZM600	76mm	200mm	50.8mm	178mm	0.058mm	0.25mm
	105SL™	76mm	200mm	20.1mm	115mm	0.076mm	0.305mm
	105SL Plus	76mm	203mm	20mm	114mm	0.076mm	0.305mm~
	110Xi4	76mm	203mm	20mm	114mm	0.076mm	0.305mm
	R110Xi4	76mm	203mm	20mm	114mm	0.076mm	0.305mm
	140Xi4	76mm	203mm	40mm	140mm	0.076mm	0.305mm
	170Xi4	76mm	203mm	51mm	180mm	0.076mm	0.305mm
	220Xi4	76mm	203mm	108mm	224mm	0.076mm	0.305mm
	ZT220	25/76mm	200mm	19mm	114mm	0.076mm	0.25mm
	ZT230	25/76mm	200mm	19mm	114mm	0.076mm	0.25mm
	ZT410	76mm	203mm	25mm	108mm^	0.058mm	0.25mm
	ZT410R	76mm	203mm	25mm	108mm^	0.058mm	0.25mm
	ZT411	76mm	203mm	25mm	108mm^	0.058mm	0.25mm
	ZT420	76mm	203mm	51mm	171mm^^	0.058mm	0.25mm
	ZT420R	76mm	203mm	51mm	171mm^^	0.058mm	0.25mm
	ZT421	76mm	203mm	51mm	171mm^^	0.058mm	0.25mm
	ZT510	76mm	203mm	20mm	114mm	0.076mm	0.305mm
	ZT610	76mm	203mm	25.4mm	114mm^*	0.058mm	0.25mm
	ZT610R	76mm	203mm	25.4mm	114mm^*	0.058mm	0.25mm
	ZT620	76mm	203mm	51mm	178mm^*	0.058mm	0.25mm
	ZT620R	76mm	203mm	51mm	178mm^*	0.058mm	0.25mm
Desktop	ZD510-HC / HC100	Zebra Cartridge Supplies Only					
	GK420t/d	13/25mm	127mm	19mm	108mm	0.076mm	0.191mm
	GX420t/d	13/25mm	127mm	19mm	108mm	0.076mm	0.191mm
	GC420t/d	25/38mm	127mm	25.4mm	108mm	0.076mm	0.178mm
	GX430t	13/25mm	127mm	19mm	108mm	0.076mm	0.191mm
	GT800	25/38mm	127mm	19mm	114mm	0.076mm	0.191mm
	ZD220	13/25mm	127mm	25.4mm	112mm	0.08mm	0.190mm
	ZD230	13/25mm	127mm	25.4mm	112mm	0.08mm	0.190mm
	ZD410	13/25mm	127mm	15mm	60mm	0.076mm	0.305mm
	ZD420	13/25mm	127mm	19mm	118mm	0.076mm	0.191mm
	ZD500	13/25/38mm	127mm	19mm	108mm	0.076mm	0.191mm
	ZD500R	13/25/35/38/76mm	127mm	19mm	108mm	0.08mm	0.305mm
	ZD620t/d	13/25mm	127mm	15mm	118mm	0.08mm	0.191mm
	LP2824 Plus	25/38mm	127mm	25.4mm	60mm	0.076mm	0.191mm
	TLP2824 Plus	25/38mm	127mm	25.4mm	60mm	0.076mm	0.191mm
Kiosk	TTP2000 58mm	25.4mm	150mm	58mm	58mm**	0.054mm	0.110mm
	TTP2000 60mm	25.4mm	150mm	60mm	60mm**	0.054mm	0.110mm
	TTP2000 80mm	25.4mm	150mm	80mm	80mm**	0.054mm	0.110mm
	TTP2000 82.5mm	25.4mm	150mm	82.5mm	82.5mm**	0.054mm	0.110mm
	KR203/KR403 58mm	25.4mm	150mm	58mm	58mm**	0.054mm	0.110mm
	KR203/KR403 60mm	25.4mm	150mm	60mm	60mm**	0.054mm	0.110mm
	KR203/KR403 80mm	25.4mm	150mm	80mm	80mm**	0.054mm	0.110mm
	KR203/KR403 82.5mm	25.4mm	150mm	82.5mm	82.5mm**	0.054mm	0.110mm
	TTP7030 80mm	25.4mm	150mm	80mm	80mm**	0.054mm	0.110mm
	TTP7030 112mm	25.4mm	150mm	112mm	112mm**	0.054mm	0.110mm
	TTP8000 210mm	50.8mm	150mm	210mm	210mm**	0.054mm	0.100mm

* For tags and receipts add 3mm to the printer Max Label Width.

** Fixed width media guides. Media will be supplied slightly narrower than media guide to allow for manufacturing tolerances.

^ Maximum label width in Tear/Cutter is 114mm.

^^ Maximum label width in Tear/Cutter is 178mm.

~ Maximum full-width media thickness for cutter is 0.23mm

~~ Maximum full-width media thickness for cutter is 0.18mm

*^ Maximum caliper for tags and receipts is 0.140mm

^* Maximum label width in Tear/Cutter

Return to Index

Printer Type	Printer	Core Size	Max Roll OD	Min Media Width	Max Media Width	Min Media Thickness	Max Media Thickness
Mobile	QL(n) 220	19mm	56mm	15.9mm	53.8mm	0.064mm	0.165mm
	QL(n) 320	19mm	67mm	31.8mm	79.2mm	0.064mm	0.165mm
	QLn 420	19/35mm	66mm	50.8mm	112mm	0.081mm	0.191mm
	ZQ210	13mm	40mm	58mm	58mm**	0.06mm	0.16mm
	ZQ220	13/19	50mm	80mm	80mm	0.058mm	0.158mm
	ZQ310 Indoor verson	19mm	40mm	58mm	58mm**	0.06mm	0.16mm
	ZQ320 Indoor version	13/19mm	40mm	76.1mm	76.8mm**	0.06mm	0.16mm
	ZQ510	19mm	51mm	35mm	80mm	0.058mm	0.160mm*^
	ZQ520	19mm	57mm	70mm	113mm	0.058mm	0.160mm*^
	ZQ520R	19mm	57mm	70mm	113mm	0.058mm	0.160mm*^
	ZQ610	19mm	56mm	15.9mm	53.8mm	0.064mm	0.165mm
	ZQ620	19mm	67mm	31.8mm	79.2mm	0.064mm	0.165mm
	ZQ630	19/35mm	66mm	50.8mm	112mm	0.081mm	0.191mm
	ZQ630R	19/35mm	66mm	51mm	112mm	0.058mm	0.165mm
	(R)P4T	19/35mm	66mm	50.8mm	104.6mm	0.081mm	0.216mm
Mobile Receipt only	RW220™	19mm	57mm	25.4mm	60mm	0.05mm	0.16mm
	RW420™	19mm	57mm	50.8mm	104.6mm	0.05mm	0.16mm
	iMZ220	19mm	48mm	50.6mm	51mm	0.05mm	0.102mm
	iMZ320	19mm	48mm	76mm	76.4mm	0.05mm	0.102mm
	EZ320	13mm	40mm	80mm	80mm	0.064mm	0.11mm
	ZQ320 Outdoor version	13/19mm	40mm	79.49mm	80mm	0.06mm	0.16mm
	ZQ310 Outdoor version	13mm	40mm	58mm	58mm**	0.06mm	0.16mm
	ZQ110	13mm	30mm	56.9mm	57.15mm	0.06mm	0.99mm

* For tags and receipts add 3mm to the printer Max Label Width

** Fixed width media guides. Media will be supplied slightly narrower than media guide to allow for manufacturing tolerances

^ Maximum label width in Peel/Rewind is 114mm

^^ Maximum label width in Peel/Rewind is 178mm

~ Maximum full-width media thickness for cutter is 0.23mm

~~ Maximum full-width media thickness for cutter is 0.18mm

*^ Maximum caliper for tags and receipts is 0.140mm

^* Maximum label width in Tear/Cutter

Return to Index

Zebra Sample Media

Rolls supplied on 76mm cores

	Part Number	Material Name	Size W x H (mm)	Labels Per Roll
Industrial Samples (76mm Core)	SAMPLE35945R	8000T Blood Bag All Temp	105 x 105	250
	SAMPLE35938	8100T Cryocool	51 x 25	100
	SAMPLE33674	8000D Ultra-Cool	76.2 x 76.2	100
	SAMPLE30739	8000T Ultra-Cool	76.2 x 76.2	100
	SAMPLE33625*	8000D Blockout	101.6 x 76.2	100
	SAMPLE17757*	8000T 7 Year Vinyl	101.6 x 76.2	100
	SAMPLE5024	8000T All-Temp	101.6 x 76.2	100
	SAMPLE5311	Z-Select 2000D	101.6 x 76.2	100
	SAMPLE66680	8000T Cryocool	50.8 x 25.4	100
	SAMPLE5076	8000T ESD Gloss	41.3 x 6.35	100
	SAMPLE68605*	8000T Extra Tuff 180 Tag	76.2 x 101.6	80
	SAMPLE5207*	Z-Perform 1000T Removable	101.6 x 76.2	100
	SAMPLE5302*	8000T Semi-Gloss	101.6 x 76.2	100
	SAMPLE68054*	8000T Semi-Gloss Blockout	101.6 x 76.2	100
	SAMPLE65123*	8000T Semi-Gloss Deep Freeze	101.6 x 76.2	100
	SAMPLE65137	8000T Semi-Gloss Piggyback	59 x 147	66
	SAMPLE5413*	8000T Semi-Gloss Removable	101.6 x 76.2	100
	SAMPLE5662*	8000T Silver Checkerboard	76.2 x 76.2	100
	SAMPLE5025*	8000T Tuff 190 Tag	76.2 x 101.6	80
	SAMPLE5156	8000T Tyre-Tack	78 x 200	50
	SAMPLE5158	8000T Tyre-Tack Extra	78 x 200	50
	SAMPLE5384*	8000T Ultra High-Tack Matte	76.2 x 76.2	100
	SAMPLE5146*	8000T Ultra-Removable	101.6 x 76.2	100
	SAMPLE5021*	8000T Ultra-Tuff 240 Tag	76.2 x 152.4	66
	SAMPLE5145*	8000T Void Matte	76.2 x 76.2	100
	SAMPLE24324*	8100T Z-Destruct PE	76.2 x 76.2	100
	SAMPLE65138*	8000T Z-Destruct Vinyl	76.2 x 76.2	100
	SAMPLE5827*	8000T Z-Endure™	76.2 x 76.2	100
	SAM68300-1	IQ Color 2000D	101.6 x 50.8	50
	SAMPLE22700*	PolyE 3100T Gloss	101.6 x 76.2	100
	SAMPLE65444*	PolyE 3000T Matte	101.6 x 76.2	100
	SAMPLE65337*	PolyE 4000T Matte High-Tack	101.6 x 76.2	100
	SAMPLE5151*	PolyO 3100T	101.6 x 76.2	100
	SAMPLE5154*	PolyO 3100T Removable	101.6 x 76.2	100
	SAMPLE65036*^	PolyPro 3000T Clear	50.8 x 95.25	100
	SAMPLE65666*	PolyPro 3000T Gloss	101.6 x 76.2	100
	SAMPLE66887*	PolyPro 3000T Gloss High-Tack	101.6 x 76.2	100
	SAMPLE65644*	PolyPro 4000D	101.6 x 76.2	100
	SAMPLE66772*	PolyPro 4000D Removable	101.6 x 76.2	100
	SAMPLE5127*	PolyPro 4000T 216 Tag	82.55 x 127	80
	SAMPLE5172*	Z-Band 4000	25.4 x 279.4	40
	SAMPLE30820*	Z-Perform 1000D	101.6 x 76.2	100
	SAMPLE35939*	Z-Perform 1000D-E	101.6 x 76.2	100
	SAMPLE30818*	Z-Perform 1000D 110 Tag	82.55 x 127	80
	SAMPLE30822*	Z-Perform 1000D Deep-Freeze	101.6 x 76.2	100
	SAMPLE33624*	Z-Perform 1000D High-Tack	101.6 x 76.2	100
	SAMPLE30821*	Z-Perform 1000D Removable	101.6 x 76.2	100
	SAMPLE5147*	Z-Perform 1000T	101.6 x 76.2	100
	SAMPLE33637*	Z-Perform 1000T 150 Tag	82.55 x 127	60
	SAMPLE33640*	Z-Perform 1000T 190 Tag	82.55 x 127	60
	SAMPLE33638*	Z-Perform 1000T High Tack	101.6 x 76.2	100
25mm Core	SAMPLE27359*	8000T Lab Resist	22 x 18	250
	SAMPLE66782*	Z-Select 2000D 145 Tag	82.55 x 127	60
	SAMPLE5222*	Z-Select 2000D 190 Tag	82.55 x 127	60

	Part Number	Material Name	Size W x H (mm)	Labels Per Roll
Industrial Samples (Cont)	SAMPLE35946R	8000T Blood Bag Deep Freeze	101.6 x 101.6	100
	SAMPLE5648*	Z-Select 2000D Removable	101.6 x 76.2	100
	SAMPLE5257*	Z-Select 2000T	101.6 x 76.2	100
	SAMPLE5408*	Z-Select 2000T Removable	101.6 x 76.2	100
	SAMPLE5159	Z-Supreme™ 3100T White	41.3 x 6.35	200
	SAMPLE5392	Z-Supreme 4000T White	41.3 x 6.35	200
	SAMPLE65652	Z-Supreme 4000T White ESD	38.1 x 6.35	200
	SAMPLE68551	Z-Supreme 4200T Yellow	38.1 x 6.35	200
	SAMPLE5061*^	Z-Ultimate 3000T Clear	50.8 x 95.25	100
	SAMPLE65344*	Z-Ultimate 3000T High-Tack	76.2 x 76.2	100
	SAMPLE5040*	Z-Ultimate 3000T Removable	76.2 x 76.2	100
	SAMPLE68540*	Z-Ultimate 3000T Silver	76.2 x 76.2	100
	SAMPLE5164*	Z-Ultimate 3000T White	76.2 x 76.2	100
	SAMPLE5229-1*	Z-Ultimate 3000T Yellow	76.2 x 76.2	100
	SAMPLE65457*	Z-Ultimate 4000T 175 Tag	92 x 134.9	80
	SAMPLE5434*	Z-Xtreme 4000T Silver High-Tack	76.2 x 76.2	100
	SAMPLE5433*	Z-Xtreme 4000T White	76.2 x 76.2	100
	SAMPLE5432*	Z-Xtreme 4000T White High-Tack	76.2 x 76.2	100
	SAMPLE66507*	Z-Xtreme 5000T Silver	76.2 x 76.2	100
	SAMPLE66506*	Z-Xtreme 5000T White	76.2 x 76.2	100
Desktop (25mm Core)	SAMPLE5300*	8000T Secondary Blood Bag	101.6 x 101.6	100
	SAMPLE22700-D*	PolyE 3100T Gloss	101.6 x 76.2	100
	SAMPLE66593*	Z-Band Direct	25 x 279	50
	SAMPLE66507-D*	Z-Xtreme 5000T Silver	76.2 X 76.2	100
	SAMPLE66506-D*	Z-Xtreme 5000T White	76.2 X 76.2	100
	SAMPLE30820-D*	Z-Perform 1000D	101.6 x 76.2	100
	SAMPLE5147-D*	Z-Perform 1000T	101.6 x 76.2	100
	SAMPLE5311-D*	Z-Select 2000D	101.6 x 76.2	100
Black Mark	SAMPLE66782-D*	Z-Select 2000D 145 Tag	80 x 39.69	100
Desktop (25mm Core)	SAMPLE5648-D*	Z-Select 2000D Removable	101.6 x 76.2	100
	SAMPLE5257-D*	Z-Select 2000T	101.6 x 76.2	100
	SAMPLE68540-D*	Z-Ultimate 3000T Silver	76.2 X 76.2	100
	SAMPLE5164-D*	Z-Ultimate 3000T White	76.2 X 76.2	100
	SAMPLE33622-K	Z-Perform 1000D 60 Receipt	80mm x 20 Metres	
	SAMPLE26213-K	Z-Perform 1000D 80 Receipt		
	SAMPLE66893-K	Z-Select 2000D 60 Receipt		
	SAMPLE66894-K	Z-Select 2000D 80 Receipt		

***Perforation between labels**

All free sample rolls, maximum 5 rolls per item per order

8000D Synthetic Receipt
Rolls Supplied on 19mm core

Part Number	Size W x H (mm)	Length	Rolls/box	Approx weight/box (kg)
SAMPLE24325-T	75.4 x continuous	11.18 metres	25	2

Rolls supplied with 'I ♥ Zebra Supplies' back print and black mark on face every 152.4mm

Return to Index

Industrial/Print Engines

ZM400
ZT510
ZM600
ZT610
105SL
ZT620
105SL PLUS
ZT420
110Xi4
140Xi4

170Xi4

220Xi4

ZT220

ZT230

ZT410

ZT411
ZT421

Core Size: 76mm / 3"
Outside Diameter: 200mm / 8"
Unless specified otherwise

Return to Index

Core Size: 76mm / 3" Outside Diameter: 200mm / 8" unless specified otherwise

Material	Part Number	Size W x H (mm)	Labels/Roll	Rolls/box	Approx weight/box (kg)	Recommended Ribbon Part Number
Z-Perform 1000D	**3004996**	51 x 25	5,860	10	12.4	No Ribbon Required
	3004861-T	51 x 32	4,790	10	12.4	
	3006307-T	57 x 32	4,470	8	10.5	
	3006308-T	70 x 32	4,470	8	12.3	
	880738-025	76 x 25	5,180	6	9.7	
	3005807*	76 x 51	3,100	6	9.9	
	3006255*	76 x 152	1,000	6	9.7	
	3006777-T	100 x 50	3,000	4	9.3	
	3006306-T	100 x 150	1,020	4	9.3	
	3005093	100 x 210	810	4	9.7	
	3002908	102 x 38	4,050	4	9.7	
	3002654	102 x 64	2,510	4	9.7	
	3007253-T	102 x 76	2,110	4	9.7	
	880746-101	102 x 102	1,432	4	9.7	
	87809	102 x 152	950	4	9.5	
	3007096-T*	102 x 152	950	4	9.5	
	3007419-T	102 x 165	990	4	9.7	
	3003245-1	148 x 210	790	4	13.9	
	3005103*	148 x 210	790	4	13.9	
Z-Select 2000D	**880150-025**	38 x 25	5,180	10	9.1	No Ribbon Required
	880154-025	51 x 25	5,180	10	11.4	
	880156-101	57 x 102	1,432	8	11.4	
	800740-155*	102 x 38	4,225	4	11.4	
	880170-076	102 x 76	1,890	4	10.1	
	880170-101	102 x 102	1,432	4	10.1	
	200963	102 x 152	950	4	9.9	
	800740-605*	102 x 152	1,142	4	12.0	
Z-Perform 1000T	**880004-025**	32 x 25	5,180	12	8.6	02300BK04045
	3006929-T	37 x 67	2,190	10	9.3	
	880006-025	38 x 25	5,180	10	9.0	
	3004416	39 x 25	5,000	10	9.0	
	3002866	48 x 35	4,490	10	13.1	02300BK04045
	76171	51 x 25	5,180	10	11.3	
	880010-031	51 x 32	4,240	10	11.3	
	880010-050	51 x 51	2,740	10	11.3	
	76173	57 x 32	4,240	8	10.4	

* perforation between labels

Return to Index

Core Size: 76mm / 3" Outside Diameter: 200mm / 8" unless specified otherwise

Material	Part Number	Size W x H (mm)	Labels/Roll	Rolls/box	Approx weight/box (kg)	Recommended Ribbon Part Number
Z-Perform 1000T (continued)	**3004486**	64 x 51	3,090	8	13.5	02300BK08345
	86186	65 x 25	5,000	8	11.2	
	76174	70 x 32	4,240	8	13.0	
	3005869*	74 x 210	800	6	10.7	
	880018-038	76 x 38	3,634	6	10.9	
	76175	76 x 51	2,740	6	10.9	
	76522	76 x 76	1,890	6	10.9	
	3005220	76 x 102	1,690	6	12.8	
	880018-127	76 x 127	1,152	6	11.1	
	880020-050	83 x 51	2,740	6	11.4	
	76178	89 x 25	5,180	6	12.0	02300BK08945
	880022-038	89 x 38	3,634	6	12.2	
	87394	100 x 50	2,820	4	9.6	02300BK10245
	3004645	100 x 100	1,670	4	9.6	
	3005091	100 x 150	1,000	4	9.6	
	880026-038	102 x 38	3,634	4	9.7	
	880026-050	102 x 51	2,740	4	9.6	
	3005676*	102 x 51	2,740	4	9.6	
	76179	102 x 64	2,220	4	9.5	
	880026-076	102 x 76	1,890	4	9.6	
	880026-082	102 x 83	1,750	4	9.6	02300BK10245
	76523	102 x 102	1,432	4	9.7	
	880026-127	102 x 127	1,152	4	9.6	
	76180	102 x 152	950	4	9.6	
	87985*	102 x 152	950	4	9.6	
	76181	102 x 165	880	4	9.6	
	880026-203	102 x 203	726	4	9.5	
	200957	105 x 148	1,127	4	9.8	02300BK11045
	3006417	127 x 64	3,000	4	15.8	02300BK13145
	76524	148 x 210	700	4	13.9	02300BK15645
	3001699*	148 x 210	800	4	13.9	
	3003632*	152 x 102	1,600	4	14.3	
	76186	152 x 216	680	4	14.3	
	3002173	210 x 298	500	2	9.8	02300BK22045

* perforation between labels

Return to Index

Core Size: 76mm / 3" Outside Diameter: 200mm / 8" unless specified otherwise

Material	Part Number	Size W x H (mm)	Labels/Roll	Rolls/box	Approx weight/box (kg)	Recommended Ribbon Part Number
Z-Select 2000T	**880114-019**	38 x 19	6,742	10	9.0	02300BK04045
	880114-025	38 x 25	5,180	10	9.0	
	76051	51 x 25	5,180	10	11.8	02300BK06045
	880118-031	51 x 32	4,240	10	12.6	
	3006323*	57 x 19	7,995	4	6.3	
	3006324*	57 x 32	5,087	4	6.4	
	880122-025	64 x 25	5,180	8	11.6	02300BK08345
	76054	70 x 32	4,240	8	13.1	
	76055	76 x 51	2,740	6	10.8	
	800630-205*	76 x 51	3,292	4	8.6	
	76527	76 x 76	1,890	6	11.0	
	76056	83 x 140	1,040	6	12.0	
	76058	89 x 25	5,180	6	12.0	02300BK08945
	880134-038	102 x 38	3,634	4	10.0	02300BK10245
	3006325*	102 x 38	4,225	4	11.3	
	880134-050	102 x 51	2,740	4	9.9	02300BK10245
	76059	102 x 64	2,220	4	9.6	
	3006326*	102 x 76	2,238	4	11.4	
	76528	102 x 102	1,432	4	9.6	
	880134-127	102 x 127	1,152	4	9.6	
	76060	102 x 152	950	4	9.5	
	800640-605*	102 x 152	1,142	4	11.7	
	880134-203	102 x 203	726	4	9.5	
	76089	148 x 210	700	4	14.6	02300BK15645
8000T All-Temp	**66125**	51 x 25	5,180	10	12.0	02100BK06045
	66087	70 x 32	4,240	8	13.4	02100BK08345
	66126	76 x 51	2,740	6	11.2	
	66090	102 x 64	2,220	4	9.8	02100BK10245
	3005778-T	102 x 76	2,000	4	9.9	
	66088	102 x 152	950	4	10.0	
	66131	102 x 165	880	4	10.0	
	76018	152 x 216	680	4	15.2	02100BK15645
Z-Perform 1000T 190 Tag	**200807***	83 x 127	1,000	4	8.0	02300BK08945
	76642*	86 x 54	2,477	4	8.6	
	3004410*#	148 x 210	750	4	17.7	02300BK15645

* perforation between labels

*# fanfold pack

Return to Index

Core Size: 76mm / 3" Outside Diameter: 200mm / 8" unless specified otherwise

Material	Part Number	Size W x H (mm)	Labels/Roll	Rolls/box	Approx weight/box (kg)	Recommended Ribbon Part Number
PolyE 3100T Gloss	**3011700**	51 x 25	5,180	10	14.3	04800BK06045
	3011701	76 x 25	5,180	6	12.6	04800BK08045
	3011702	102 x 51	2,590	4	10.5	04800BK10245
	3011703	102 x 76	1,890	4	11.3	
	3011711	102 x 102	1,432	4	11.3	
	3011713	102 x 152	950	4	11.1	
	3011714	148 x 210	650	4	15	04800BK15645
PolyO 3100T	**3009050**	102 x 152	950	4	11.3	03200BK10245
	3008835	102 x 76	1,890	4	11.4	
	3009051	152 x 102	1,432	4	15.8	03200BK15645
PolyPro 3000T Gloss	**3012949**	51 x 25	6380	2	2.6	04800BK06045
	3012950	102 x 51	3377	2	5.0	04800BK11045
	3012403	102 x 152	950	2	4.5	
PolyPro 4000T Matte#	**3006622**	102 x 102	1,070	2	4.62	03200BK11045
8100T Cryocool	**3017018**	40 x 25	5,940	2	1.9	05095BK06045
	3017019	51 x 25	5,940	2	2.6	
8000T Cryocool	**3008152**	30 x 15	9,300	3	2.2	05095BK04045
	3005982	38 x 13	9449	2	1.8	
	3008207	40 x 25	5,940	2	1.9	
	3004545	51 x 25	5940	2	2.6	05095BK06045
8100T Z-Destruct PE	**3012672**	51 x 25	5180	6	6.7	
8000T Void Matte	**3006690**	51 x 25	2,500	2	4.3	04800BK06045
8000T Extra Tuff 180 Tag	**3006305***	25 x 229	2000	1	2.4	03200BK10245
Z-Slip	**10006703***	111 x 175	580	4	12.2	No Ribbon Required
	10004425*	168 x 152	660	2	9.5	
Z-Ultimate 3000T White	**880328-012**	25 x 13	9,449	12	7.0	04800BK04045
	76534	38 x 13	9,449	10	8.7	
	880332-019	38 x 19	6,742	10	8.8	
	880332-025	38 x 25	5,180	10	8.7	
	880336-012	51 x 13	9,449	10	11.8	04800BK06045
	76535	51 x 25	5,249	10	11.8	
	76013	51 x 32	4,295	10	11.9	
	76014	70 x 32	4,295	8	13.2	04800BK08045
	880344-025	76 x 25	5,180	6	10.6	
	76536	76 x 51	2,779	6	11.5	
	76015	76 x 76	1,890	6	11.3	
	3004723	83 x 25	6,360	6	15	04800BK08945
	880350-025	102 x 25	5,180	4	9.8	04800BK11045
	880350-050	102 x 51	2,740	4	9.8	
	880350-063	102 x 64	2,220	4	9.8	
	880350-101	102 x 102	1,432	4	9.8	
	880350-152	102 x 152	950	4	9.8	
	880358-101	152 x 102	1,432	4	11	

* perforation between labels

previously known as 8000T Secondary Blood Bag

Return to Index

Core Size: 76mm / 3" Outside Diameter: 200mm / 8" unless specified otherwise

Material	Part Number	Size W x H (mm)	Labels/Roll	Rolls/box	Approx weight/box (kg)	Recommended Ribbon Part Number
Z-Ultimate 3000T Silver	**880368-019**	38 x 19	6,742	10	10.6	04800BK04045
	880368-025	38 x 25	5,180	10	10.6	
	880372-025	51 x 25	5,180	10	12.0	04800BK06045
	880374-019	57 x 19	6,742	8	10.9	
	880374-038	57 x 38	3,634	8	10.9	
	86164	60 x 39	4,543	8	11.5	
	880378-031	70 x 32	4,240	8	12.7	04800BK08045
	880378-044	70 x 44	3,150	8	12.7	
	880380-025	76 x 25	5,180	6	10.6	
	880380-076	76 x 76	1,890	6	10.6	
	880386-076	102 x 76	1,890	4	9.5	04800BK11045
	880386-101	102 x 102	1,432	4	9.5	
Z-Perform 1000T - Print Engine OD - 300mm	**3001627**	148 x 210	2,100	2	20.1	02300BK15690

* perforation between labels

Return to Index

Desktop

GK420t/d	**ZD410**
ZD420	**GX420t/d**
GX430t	**ZD500**
GC420t/d Plus	**TLP2824**
GT800	**ZD620t/d**

HC100 - ZD510-HC

Core Size: 25mm / 1"
Outside Diameter: 127mm / 5" (*Unless specified otherwise)*

I ♥ Zebra ZipShip℠

Return to Index

Core Size: 25mm / 1" Outside Diameter: 127mm / 5" (*Unless specified otherwise)*

Material	Part Number	Size W x H (mm)	Labels/Roll	Rolls/box	Approx weight/box (kg)	Recommended Ribbon Part Number
Z-Perform 1000D	880595-025DU	38 x 25	2,580	12	6.0	No Ribbon Required
	880175-031D	51 x 32	2,100	12	7.6	
	880181-031D	70 x 32	2,100	12	10.5	
	880181-038D	70 x 38	1,790	12	10.8	
	800283-205*	76 x 51	1,370	12	10.6	
	880191-038D	102 x 38	1,790	12	14.3	
	880191-076D	102 x 76	930	12	13.9	
	880191-101D	102 x 102	700	12	14.3	
	800284-605*	102 x 152	475	12	14.4	
	3010066-T	102 x 159	440	4	4.7	
	3012883-T*	102 x 178	400	12	14.5	
	3016407-T*	102 x 192	350	12	14.5	
	3012884-T*	102 x 203	350	12	14.5	
Z-Select 2000D	3007207*	25 x 76	930	12	3.5	No Ribbon Required
	3007208-T*	31 x 22	2,780	12	4.2	
	800261-105*	32 x 25	2,580	12	4.6	
	880199-025D	51 x 25	2,580	12	7.7	
	800262-075*	57 x 19	3,315	12	7.8	
	800262-125*	57 x 32	2,100	12	7.9	
	800262-205*	57 x 51	1,370	12	8.2	
	3007209-T*	57 x 76	930	12	8.2	
	800262-405*	57 x 102	700	12	8.5	
	800263-105*	76 x 25	2,580	12	10.7	
	800263-205*	76 x 51	1,370	12	11.1	
	87000	100 x 50	1,300	4	4.5	
	800264-105*	102 x 25	2,580	12	14.5	
	800264-155*	102 x 38	1,790	12	14.5	
	800264-255*	102 x 64	1,100	12	14.6	
	800264-305*	102 x 76	930	12	14.7	
	800264-405*	102 x 102	700	12	14.7	
	800264-505*	102 x 127	565	12	14.8	
	800264-605*	102 x 152	475	12	14.8	
Z-Select 2000D Removable	800261-107*	38 x 25	2580	12	5.6	No Ribbon Required
	800262-127*	57 x 32	2100	12	8.4	
	880239-076D	102 x 76	930	12	11.52	
Z-Perform 1000D 80 Receipt	800420-314	51mm x cont.	100 metres	12	4.8	No Ribbon Required
	800440-314	102mm x cont.	100 metres	12	9.5	
Z-Select 2000D 190 Tag OD 102mm	■ 800999-005*	32 x 57	600	12	2.4	No Ribbon Required
	◆■ 800999-009*	57 x 35	967	12	4.5	
	800999-020*	102 x 76	450	12	7.9	
8000D Jewelry Supplied with Black Mark between each label	10010064 without flaps	56 x 13	3,510	6	2.6	No Ribbon Required
	10010065 with flaps	56 x 13	3,510	6	2.7	
8000D Linerless EMEA	3015728	105 x cont	100 Metres	8	4.5	No Ribbon Required
	3013593	100 x cont	89 Metres	8	4.1	EOL Whilst stocks last
	3016796	50 x cont	89 Metres	8	3.5	No Ribbon Required

■ supplied with hole

◆ inside wound

*Perforation between labels

Return to Index

Core Size: 25mm / 1" Outside Diameter: 127mm / 5" (*Unless specified otherwise)*

Material	Part Number	Size W x H (mm)	Labels/Roll	Rolls/box	Approx weight/box (kg)	Recommended Ribbon Part Number
Z-Perform 1000T	**880003-025D**	38 x 25	2580	12	5.6	02300GS06407
	880007-025D	51 x 25	2580	12	7.3	
	880409-031DU	57 x 32	2100	12	8.1	
	3006403-T	70 x 30	2400	12	9.9	02300GS08407
	880013-038D	70 x 38	1790	12	9.9	
	800294-155*	102 x 38	1790	12	13.7	02300GS11007
	880023-063D	102 x 64	1100	12	14.0	
	800294-305*	102 x 76	930	12	14.0	
	87604	102 x 102	662	12	14.1	
	800294-605*	102 x 152	475	12	14.2	
Z-Select 2000T	**3007200-T***	31 x 22	2,890	12	4.3	02300GS06407
	800271-105*	32 x 25	2,580	12	4.5	
	3007201-T*	51 x 25	2,580	8	4.8	
	800272-075*	57 x 19	3,315	12	7.7	
	3006318*	57 x 32	2,100	12	7.8	
	3007202-T*	57 x 51	1,370	12	7.8	
	3007203-T*	57 x 76	930	12	7.8	
	3007204-T*	57 x 102	700	12	7.8	
	3007205-T*	70 x 32	2,100	4	3.3	02300GS08407
	800273-105*	76 x 25	2,580	12	10.2	
	800273-205*	76 x 51	1,370	12	10.4	
	800274-105*	102 x 25	2,580	12	14.2	02300GS11007
	3006319*	102 x 38	1,790	12	14.2	
	800274-205*	102 x 51	1,370	12	14.3	
	3007206-T*	102 x 64	1,100	4	4.8	
	3006320*	102 x 76	930	12	14.5	
	3006321*	102 x 102	700	12	14.5	
	800274-505*	102 x 127	565	12	14.5	
	3006322*	102 x 152	475	12	14.6	
Poly E 3100T Gloss	**3011715**	51 x 25	2,398	12	8.0	05095GS06407
	3011718	102 x 76	800	12	14.3	05095GS11007
PolyPro 3000T Clear Supplied with Black Mark between each label	**3012962**	55 x 35	2,100	4	2.7	05095GS06407
	3004428	75 x 35	1,760	4	3.2	05095GS08407
PolyPro 3000T Gloss	**3011159**	51 x 25	2,905	2	1.2	05095GS06407
	3010793	102 x 51	1,520	4	4.5	05095GS11007
	3012964	102 x 152	533	4	4.5	
Z-Ultimate 3000T White	**3009761**	20 x 20	3,760	12	3.6	05095GS06407
	880243-012D	38 x 13	4,650	12	5.5	
	880247-025D	51 x 25	2,580	12	7.2	
	880247-031D	51 x 32	2,100	4	2.5	
	880249-019D	57 x 19	3,300	12	7.9	
	880249-031D	57 x 32	2,100	12	7.9	
	880253-031D	70 x 32	2,100	12	9.8	05095GS08407
	880255-025D	76 x 25	2,580	12	10.4	
	880255-050D	76 x 51	1,370	12	10.4	
	87443	76 x 76	1,000	12	11.5	
	880261-050D	102 x 51	1,370	12	13.9	05095GS11007
	880261-076D	102 x 76	930	12	13.9	

*Perforation between labels

Return to Index

Core Size: 25mm / 1" Outside Diameter: 127mm / 5" (*Unless specified otherwise)*

Material	Part Number	Size W x H (mm)	Labels/Roll	Rolls/box	Approx weight/box (kg)	Recommended Ribbon Part Number
Z-Ultimate 3000T Silver	**3006493**	38 x 19	3,720	12	6.1	05095GS06407
	880269-025D	51 x 25	2,580	12	7.2	
	3006628	70 x 32	2,370	12	10.9	05095GS08407
	880277-076D	76 x 76	930	12	10.1	
	880283-050D	102 x 51	1,370	12	13.6	05095GS11007
8000T Blood Bag Deep Freeze	**3017127**	105 x 105	543	4	4.9	03200GS11007
8000T Primary Blood Bag	**3013623**	105 x 105	543	4	4.9	03200GS11007
PolyPro 4000T Matte	**3008426**	102 x 102	490	4	4.2	03200GS11007
8100T Cryocool	**3017014**	30 x 15	4,430	3	0.4	05095GS06407
	3017015	51 x 25	2,700	2	1	
	3017016	38 x 13	4,860	2	1.0	
	3017017	32 x 15	2,700	2	1.2	
8000T Cryocool	**3009674**	30 x 15	4,430	3	0.4	05095GS06407
	3005732	32 x 25	2,700	2	1	
	3007562	38 x 13	4,860	2	1.0	
	3007810	51 x 25	2,700	2	1.2	
8000T Lab Resist	**3013781**	22 x 18	3,269	3	0.9	74941

* perforation between labels

New Item

Return to Index

ZipShip kits

The complete labelling solution for a wide range of applications, including address labels, shipping labels, picking / receiving labels, product identification / inventory management/ capital asset labelling

Industrial Ratio: 3 rolls to 1 Ribbon

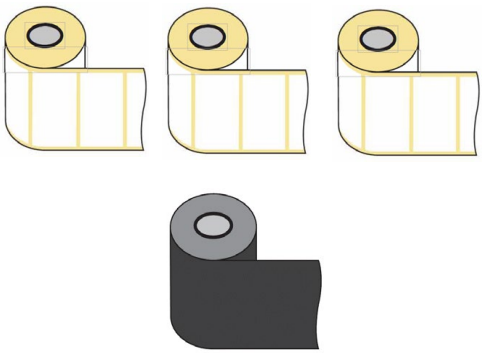

Desktop Ratio: 3 rolls to 3 Ribbon

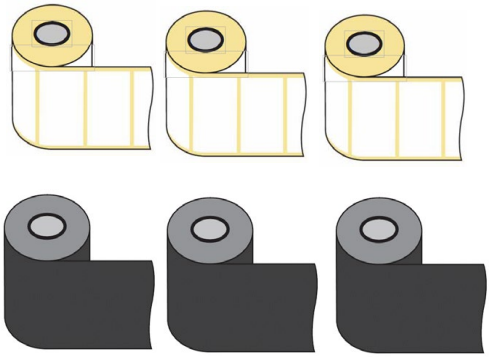

I ♥ Zebra ZipShip℠

Return to Index

ZipShip Kits

For Industrial Printers

All label rolls supplied on 76.2mm cores, with roll length of 150 metres, maximum outer diameter 200mm.

Part Number	Economy, uncoated thermal transfer paper labels and wax ribbons	Label Size (mm)	Ribbon Width (mm)
ZIPSHIPKIT-A	3 rolls Z-Perform 1000T labels plus 1 roll 2300 wax ribbon **3 x 880026-076 plus 1 x 02300BK11045 - 1890 labels per roll, 5670 labels per kit**	102 x 76 5670 labels per kit	110
ZIPSHIPKIT-B	3 rolls Z-Perform 1000T labels plus 1 roll 2300 wax ribbon **3 x 76523 plus 1 x 02300BK11045 - 1432 labels per roll, 4296 labels per kit**	102 x 102 4296 labels per kit	110
ZIPSHIPKIT-C	3 rolls Z-Perform 1000T labels plus 1 roll 2300 wax ribbon **3 x 76180 plus 1 x 02300BK11045 - 950 labels per roll, 2850 labels per kit**	102 x 152 2850 labels per kit	110

For 4 inch Thermal Transfer Desktop Printers

All label rolls supplied on 25.4 mm cores, maximum outer diameter 127mm.

Part Number	Premium, top-coated thermal transfer labels and ribbons	Label Size (mm)	Ribbon Width (mm)
ZIPSHIPKIT1	3 rolls Z-Select 2000T labels plus 3 rolls 2300 wax desktop ribbons **3 x 3006320 plus 3 x 02300GS11007 - 930 labels per roll**	102 x 76 2790 labels per kit	110
ZIPSHIPKIT2	3 rolls Z-Select 2000T labels plus 3 rolls 2300 wax desktop ribbons **3 x 3006321 plus 3 x 02300GS11007 - 700 labels per roll**	102 x 102 2100 labels per kit	110
ZIPSHIPKIT3	3 rolls Z-Select 2000T labels plus 3 rolls 2300 wax desktop ribbons **3 x 3006322 plus 3 x 02300GS11007 - 475 labels per roll**	102 x 152 1425 labels per kit	110
ZIPSHIPKIT4	1 roll Z-Ultimate 3000T White labels plus 1 roll 5095 resin desktop ribbon **1 x 880247-025D plus 1 x 05095GS06407,**	51 x 25 2580 labels per kit	64
ZIPSHIPKIT5	3 rolls Z-Select 2000T labels plus 3 rolls ZD420 cartridge ribbons **3 x 3006320 plus 3 x 02300CT11007 - 860 labels per roll**	102 x 76 2790 labels per kit	110
LRDOC-WHITE	3 rolls Z-Select 2000T labels plus 3 rolls 3200 wax/resin desktop ribbons **3 x 3004444 plus 3 x 03200GS08407 - 1760 labels per roll**	75 x 35 5280 labels per kit	84
LRDOC-CLEAR	3 rolls PolyPro 3000T Clear labels plus 3 rolls 5095 resin desktop ribbons **3 x 3004428 plus 3 x 05095GS08407 - 1760 labels per roll**	75 x 35 5280 labels per kit	84

Return to Index

	Printer	Material	Part Number	Size W x H (mm)	Core Size/ OD	Length	Rolls/box	Approx weight/box (kg)
RECEIPT ONLY MOBILE PRINTERS	EZ320	Z-Perform 1000D 80 Receipt	**3012973**	80 x cont.	13/40	11.28 metres	25	1.76
	MZ/iMZ	Z-Peform 1000D 60 Receipt	**3006130**	50 x cont.	19/46	20.3 metres	30	1.8
			3006132	75.4 x cont.	19/46	20.3 metres	30	2.6
		Z-Peform 1000D 80 Receipt	**3006129**	50 x cont.	19/46	14.6 metres	30	1.8
			3006131	75.4 x cont.	19/46	14.6 metres	30	2.6
		8000D 10 Year Receipt	**3007301-T**	75 x cont.	19/48	20.1 metres	30	2.6
	RW220	Z-Perform 1000D 80 Receipt	**3003061**	50 x cont.	19/53	19 metres	20	1.7
	RW420	Z-Perform 1000D 60 Receipt	**3004596**	101.6 x cont.	19/57	30 metres	16	3.1
		Z-Perform 1000D 80 Receipt	**3003072**	101.6 x cont.	19/57	24.1 metres	16	3.5
		8000D 10 Year Receipt	**3006419-T**	101.6 x cont.	19/57	31.7 metres	16	3.5
	ZQ110	Z-Perform 1000D 60 Receipt	**3010766**	57 x cont.	13/31	7.9 metres	50	1.0

	Printer	Material	Part Number	Size W x H (mm)	Core Size/ OD	Length	Rolls/box	Approx weight/box (kg)
RECEIPT AND LABEL MOBILE PRINTERS	ZQ220	Z-Perform 1000D 60 Receipt	**3014861-T**	80 x cont	13/50	26.52	30	3.0
	ZQ310	Z-Perform 1000D 60 Receipt	**3013689**	57.75 x Cont	13/40	15.54 metres	50	2.8
		Z-Perform 1000D 80 Receipt	**3013690**	57.75 x Cont	13/40	11.28 metres	50	2.8
		Z-Perform 1000D	**3013758**	54.5 x 38.1	19/40	126	40	2.3
		8000D Linerless Mobile EMEA (Linerless capabilities req)	**3013255**	58 x cont.	13/40	10 metres	60	4.2
	ZQ320	Z-Perform 1000D 60 Receipt	**3013286**	79.77 x Cont	13/40	15.54 metres	50	3.8
		Z-Perform 1000D 80 Receipt	**3013287**	79.77 x Cont	13/40	11.28 metres	50	3.8
		Z-Perform 1000D	**3013759**	76.2 x 50.8	19/40	96	40	2.6
		8000D Linerless Mobile EMEA (Linerless capabilities req)	**3013254**	80 x cont.	13/40	10 metres	50	5.1
	QLn220 & ZQ610	Z-Perform 1000D 80 Receipt	**3003061**	50 x cont.	19/53	19 metres	20	1.7
		Z-Perform 1000D (with black mark)	**3008872-T**	38.1 x 38.1	19/53	270	20	1.4
			3007842-T	50.8 x 25.4	19/56	430	20	2.0
		Z-Select 2000D (with black mark)	**3014816-T***	50.8 x 25.4	19/56	446	20	2.2
			3003060	50.8 x 38.1	19/56	250	20	1.8
			3003059	50.8 x 50.8	19/56	185	20	1.8
		PolyPro 4000D (with black mark)	**3003347***	50.8 x 25.4	19/53	340	20	1.9
			3006404-T*	50.8 x 50.8	19/53	200	20	1.9
		8000D Linerless Mobile US (Linerless capabilities req)	**LD-R2LS5W**	50.8 x cont.	19/56	19.8 metres	36	7.3

*** perforation between labels**

Return to Index

	Printer	Material	Part Number	Size W x H (mm)	Core Size/ OD	Length	Rolls/box	Approx weight/box (kg)
	QLn320 & ZQ620	Z-Perform 1000D 60 Receipt	**3007158-T**	57.15 x cont.	19/40	12.19 metres	25	1.1
		Z-Perform 1000D 80 Receipt	**3007159-T**	57.15 x cont.	19/40	8.84 metres	25	1.1
		Z-Perform 1000D 80 Receipt	**3003360**	76.2mm x cont.	19/63	27.5 metres	20	3.6
		Z-Perform 1000D (with black mark)	**3008731-T**	76.2 x 50.8	19/66	300	20	3.8
			3007589-T	76.2x 101.6	19/66	150	20	3.8
		Z-Select 2000D 35mm core ▲ 19mm core ‡	**3003075*‡**	76.2 x 44.45	19/63	350	20	4.2
			3002086*▲	76.2 x 101.6	35/66	130	18	3.2
			3002087*▲	76.2 x 76.2	35/66	170	18	3.2
			3003353‡	60 x 50	19/63	300	16	2.7
		Z-Select 2000D Removable (with black mark)	**3004840-T***	76.2 x 44.45	19/66	350	20	4.0
		PolyPro 4000D (with black mark)	**3003355***	76.2 x 25.4	19/66	500	16	3.1
		Z-Perform 1000D 110 Tag 35mm core (with black mark)	**3003349***	76.2 x 38.1	35/66	400	16	2.1
RECEIPT AND LABEL MOBILE PRINTERS	QLn420 & ZQ630	Z-Perform 1000D 60 Receipt	**3003070**	75.4 x cont.	19/55	21.00 metres	20	2.7
		Z-Perform 1000D 80 Receipt	**3003072**	101.6mm x cont.	19/57	24.1 metres	16	3.5
		Z-Perform 1000D (with black mark)	**3008870-T***	101.6 x 50.8	19/66	300	16	4.0
			3008871-T*	101.6 x 101.6	19/66	150	16	4.0
			3005281-T	101.6 x 152.4	19/63	110	16	4.3
		Z-Select 2000D (with black mark)	**3003076***	101.6 x 50.8	19/63	300	16	4.3
			3003073*	101.6 x 76.2	19/63	200	16	4.3
			3003071*	101.6 x 101.6	19/65	150	16	4.3
			3003074*	101.6 x 152.4	19/65	105	16	4.4
		8000D Linerless Mobile US (Linerless capabilities req)	**LD-R4LF5P**	101.6 x cont.	19/65	25.9 metres	20	10.5
	ZQ510 & ZQ511	Z-Perform 1000D 60 Receipt	**3006132**	75.4 x cont.	19/46	20.3 metres	30	2.6
		Z-Perform 1000D 80 Receipt	**3006131**	75.4 x cont.	19/46	14.6 metres	30	2.6
		8000D 10 Year Receipt	**3007301-T**	75 x cont.	19/48	20.1 metres	30	2.6
		Z-Perform 1000D (with black mark)	**3012910-T**	50.8 x 25.4	19/51	353	16	1.4
			3012911-T	76.2 x 50.8	19/51	187	16	2.0
		8000D Linerless Mobile EMEA (Linerless capabilities req)	**3016410**	76 x cont	19/50	19 metres	20	1.7
	ZQ520 & ZQ521	Z-Perform 1000D 60 Receipt	**3004596**	101.6 x cont.	19/57	30 metres	16	3.1
		Z-Perform 1000D 80 Receipt	**3003072**	101.6 x cont.	19/57	24.1 metres	16	3.5
		8000D 10 Year Receipt	**3006419-T**	101.6 x cont.	19/57	31.7 metres	16	3.5
		Z-Perform 1000D (with black mark)	**3012911-T**	76.2 x 50.8	19/51	187	16	2.0
			3012912-T	101.6 x 50.8	19/56	247	16	3.5
			3012913-T	101.6 x 152.4	19/56	85	16	3.5
	P4T	Z-Select 2000T (with black mark) 05555BK110D ribbon req	**3006291-T***	101.6 x 76.2	19/66	230	9	2.8
			3006292-T*	101.6 x 101.6	19/66	180	9	2.8
			3006293-T*	101.6 x 152.4	19/66	120	9	2.8
		Z-Ultimate 3000T White (with black mark) 05095BK110D ribbon req	**3007453***	50.8 x 31.75	19/66	590	18	3.2
			3006295*	76.2 x 50.8	19/66	380	18	4.6
			3006296*	101.6 x 50.8	19/66	380	9	3.1

*** perforation between labels**

Return to Index

Kiosk Printers	Material	Part Number	Width (mm)	Roll Length (metres)	Rolls/box	Approx weight/box (kg)	KR203/403	TTP 2000	TTP 7030	TTP 8000
25mm Core 150mm OD	Z-Select 2000D 60 receipt	**01942-058Z**	58	250	12	10.1	**X**	**X**		
		01942-060Z	60	250	12	10.4	**X**	**X**		
		01942-080Z	80	250	12	13.9	**X**	**X**	**X**	
		01942-082Z	82.5	250	4	4.8	**X**	**X**		
		01942-112Z	112	250	8	13.0			**X**	
50mm 150mm OD	Z-Select 2000D 60 receipt	**01941-210Z**	210	160	2	5.7				**X**

Return to Index

Wristbands

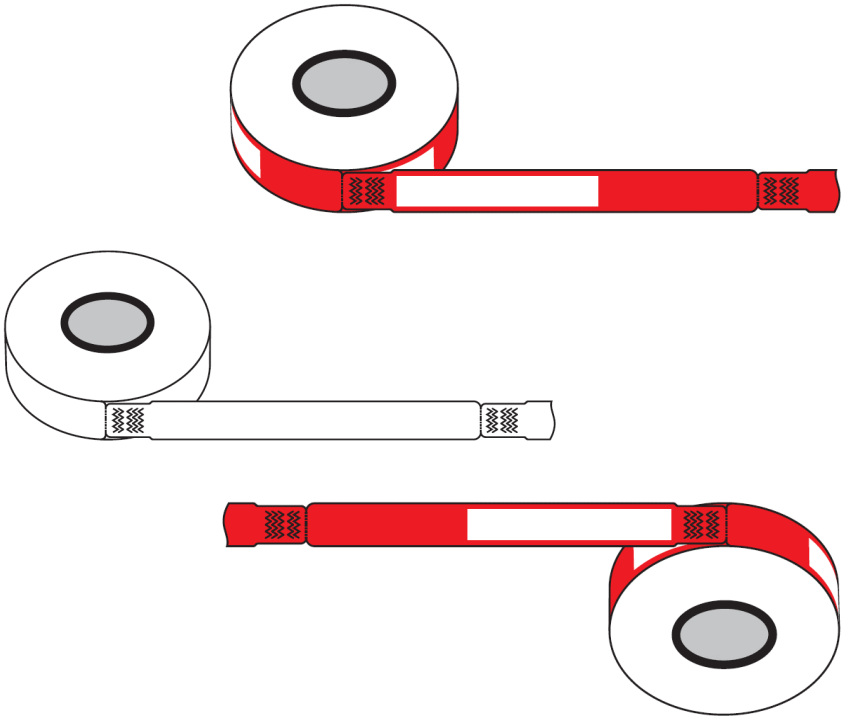

Return to Index

Printer	Material	Part Number	Size W x H (mm)	Order unit	Cartr./ kit	Bands/ Cartr.	Approx weight/box (kg)
HC100 ZD510-HC CARTRIDGE	Z-Band UltraSoft	**10015355K**	25 x 279 Adult size	Kit	6	175	2.8
		10015355-RK Red Border	25 x 279 Adult size	Kit	6	175	2.8
		10015355-BK Blue Border	25 x 279 Adult size	Kit	6	175	2.8
		10015355-GK Green Border	25 x 279 Adult size	Kit	6	175	2.8
		10015355-OK Orange Border	25 x 279 Adult size	Kit	6	175	2.8
		10015355-PIK Pink Border	25 x 279 Adult size	Kit	6	175	2.8
		10015355-PUK Purple Border	25 x 279 Adult size	Kit	6	175	2.8
		10015355-YK Yellow Border	25 x 279 Adult size	Kit	6	175	2.8
		10015356K	19 x 279 Adult size	Kit	6	175	2.8
		10015357K	25 x 178 Paediatric size	Kit	6	250	2.8
		10015358K	25 x 152 Baby size	Kit	6	300	2.8
		10015358-PK Pink	25 x 152 Baby size	Kit	6	303	1.25
		10015358-BK Blue	25 x 152 Baby size	Kit	6	303	1.25
		10015359K	19 x 152 Baby size	Kit	6	300	1.25
	Z-Band Direct	**10006995K**	25 x 279 Adult size	Kit	6	200	1.85
		10006997K	19 x 279 Adult size	Kit	6	200	1.85
		10006995-1K Red pre-print	25 x 279 Adult size	Kit	6	200	1.85
		10006995-2K Blue pre-print	25 x 279 Adult size	Kit	6	200	1.85
		10006995-3K Green pre-print	25 x 279 Adult size	Kit	6	200	1.85
		10006995-4K Purple pre-print	25 x 279 Adult size	Kit	6	200	1.85

Return to Index

Printer	Material	Part Number	Size W x H (mm)	Order unit	Cartr./ kit	Bands/ Cartr.	Approx weight/box (kg)
HC100 ZD510-HC CARTRIDGE	Z-Band Direct (Cont)	**10006995-5K Pink pre-print**	25 x 279 Adult size	Kit	6	200	1.85
		10006995-6K Orange pre-print	25 x 279 Adult size	Kit	6	200	1.85
		10006995-7K Yellow pre-print	25 x 279 Adult size	Kit	6	200	1.85
		10006995-RK RED border	25 x 279 Adult size	Kit	6	200	1.85
		10006999K	25 x 178 Paediatric size	Kit	6	300	1.25
		10006999-RK RED border	25 x 178 Paediatric size	Kit	6	300	1.25
		10006998K	25 x 152 Baby size	Kit	6	350	2.2
	Z-Band Newborn Soft	**10031289K**	19 x 195 Neonatal size	Kit	6	260	2.2
	Z-Band Newborn	**10035439K**	19 x 195 Neonatal Size	Kit	6	260	2.2
	QuickClip	**10027730K**	30 x 279 Adult size	Kit	4*	240	3.0
		10027729K	25 x 178 Paediatric size	Kit	3**	1,140	3.0

	Part Number	Colour	Order unit	Clips per Bag
Colour Clips	**97032-RED**	Red	Bag	275
	97032-BLUE	Blue	Bag	275
	97032-GREEN	Green	Bag	275
	97032-YELLOW	Yellow	Bag	275
	97032-PINK	Pink	Bag	275

Return to Index

Desktop	Material	Part Number	Size W x H (mm)	Order unit	Cartr./ kit	Bands/ Cartr.	Approx weight/box (kg)
TLP2824	**Z-Band 4000 Kits**	**ZBAND2**	25 x 279 Adult size	Kit	3+3*	795	1.5
G_Series/ ZD/TLP2844, TLP3844,TLP3842/R2844-Z		**ZBAND3**	25 x 279 Adult size	Kit	3+3*	795	1.5
Soft Foam, padded Cuff with velcro fastening	**ComfyCuff Wristband**	**LB2-BABY-P**	35 x 140 Baby size	Box	Pieces Per Box	100	4.5

Industrial	Material	Part Number	Size W x H (mm)	Labels/Roll	Rolls/box	Approx weight/box (kg)
76mm core 200mm OD	**Polypropylene Direct Thermal**	**10005007**	25 x 279 Adult size	450	6	4.1

Supplied with perforation and black mark between each wristband Printer requires black marking sensing capability
Rolls are sold in box quantities only

Industrial	Material	Part Number	Size W x H (mm)	Labels/Roll	Rolls/box	Approx weight/box (kg)
76mm core 200mm OD	**Polyester Thermal Transfer**	**ZBAND1** kits	25 x 279 Adult size	1,590	3+1*	2.7

Supplied with perforation and sensing notch between each wristband
*Each kit contains 3 rolls of Z-Band 4000 wristbands (530 bands per roll) plus 1 roll of 5095 resin ribbon, 40mm x 450M

Description	Material	Part Number	Size W x H (mm)	Sheets Per Box	Approx weight/box (kg)
32 paper labels in A4 format	Paper	PLS-103E	68 x 23	1000	

A white paper label with permanent adhesive designed to be printed on laser printers for application onto medical and patient records. The labels are supplied on A4 sheets with 32 individual labels per sheet and features an adhesive-free zone form and edges to prevent printer jams, reducing costly printer maintenance.

Return to Index

Printer	Material	Part Number	Size W x H (mm)	Order unit	Rolls/box	Bands/roll	Approx weight/box (kg)
DESKTOP PRINTERS 25mm CORE 127mm OD	Z-Band Fusion	FID-ADULT-L3-1-200T##	Adult size (Print area 70 x 22)	Box	5	200	3.0
		FID-ADULT-L3-1-200T-RED border and strap	Adult size (Print area 70 x 22)	Box	5	200	3.0
		FID-PED-L3-1-200T##	Paediatric size (Print area 70 x 22)	Box	5	200	3.0
		FID-PED-L3-1-200T-RED border and strap	Paediatric size (Print area 70 x 22)	Box	5	200	3.0
		FID-BABY-L3-1-200T##	Baby size (Print area 70 x 22)	Box	5	200	2.4
		FID-BABY-L3-1-200T-RED border	Baby size (Print area 70 x 22)	Box	5	200	2.4
	Z-Band UltraSoft	10018856	25 x 279 Adult Size	Roll	6	175	1.15
		10018856-R	25 x 279 Adult Size	Roll	6	175	1.15
		10018857	25 x 178 Paediatric size	Roll	6	250	2.5
		10019015	25 x 152 Baby size	Roll	6	300	2.5
		10031296	19 x 152 Baby size	Rdl	6	300	1.25
	Z-Band Direct	10005008	25 x 279 Adult Size	Roll	6	200	2.2
		10004443-1# red stripes	25 x 279 Adult size	Roll	6	200	2.2
		10003852	25 x 178 Paediatric size	Roll	6	300	2.2
		10003853	25 x 152 Baby size	Roll	6	350	2.2
	Z-Band Direct Lite	10037679	25 x 279	Roll	6	200	2.2
	Z-Band Newborn Soft	10007909 Z-Band Newborn Soft	50 x 178 Neonatal size	Roll	6	275	2.2
	QuickClip	10027728K	30 x 279 Adult size	Kit	6*	1,440	3.0

Supplied with perforation and black mark between each wristband, printer requires black marking sensing capability # Other colours available subject to lead-time and MOQ of 4 boxes. Please enquire for pricing
No black mark - perforation only

New Item

Printer	Material	Part Number	Size W x H (mm)	Labels/Roll	Rolls/box	Bands per roll	Approx weight/box (kg)
DESKTOP PRINTERS 25mm CORE 127mm OD	Z-Band Fun	10012712-1 RED	25 x 254	Roll	4	350	1.8
		10012712-2 YELLOW	25 x 254	Roll	4	350	1.8
		10012712-3 BLUE	25 x 254	Roll	4	350	1.8
		10012712-4 GREEN	25 x 254	Roll	4	350	1.8
		10012712-5 PINK	25 x 254	Roll	4	350	1.8
		10012712-6 ORANGE	25 x 254	Roll	4	350	1.8
		10012712-7 PURPLE	25 x 254	Roll	4	350	1.8
	Z-Band Splash	10012718-1 RED	25 x 254	Roll	4	350	1.8
		10012718-2 YELLOW	25 x 254	Roll	4	350	1.8
		10012718-3 BLUE	25 x 254	Roll	4	350	1.8
		10012718-4 GREEN	25 x 254	Roll	4	350	1.8
		10012718-5 PINK	25 x 254	Roll	4	350	1.8
		10012718-6 ORANGE	25 x 254	Roll	4	350	1.8
		10012718-7 PURPLE	25 x 254	Roll	4	350	1.8

Supplied with perforation between each wristband. Rolls are sold in complete box quantities only

Return to Index

Printer	Material	Part Number	Size W x H (mm)	Order Unit	Cart./box	Bands/Cartr	Approx weight/box (kg)
HC100 ZD510 CARTRIDGE	Z-Band Fun	10012713-1K RED	25 x 254	Kit	6	350	2.7
		10012713-2K YELLOW	25 x 254	Kit	6	350	2.7
		10012713-3K BLUE	25 x 254	Kit	6	350	2.7
		10012713-4K GREEN	25 x 254	Kit	6	350	2.7
		10012713-5K PINK	25 x 254	Kit	6	350	2.7
		10012713-6K ORANGE	25 x 254	Kit	6	350	2.7
		10012713-7K PURPLE	25 x 254	Kit	6	350	2.7
	Z-Band Splash	10012717-1K RED	25 x 254	Kit	6	350	2.7
		10012717-2K YELLOW	25 x 254	Kit	6	350	2.7
		10012717-3K BLUE	25 x 254	Kit	6	350	2.7
		10012717-4K GREEN	25 x 254	Kit	6	350	2.7
		10012717-5K PINK	25 x 254	Kit	6	350	2.7
		10012717-6K ORANGE	25 x 254	Kit	6	350	2.7
		10012717-7K PURPLE	25 x 254	Kit	6	350	2.7

Supplied with perforation between each wristband. Cartridges are sold in complete KIT quantities only

Return to Index

Zebra Sample Ribbon Programme
For Industrial Printers

Rolls supplied on 25mm cores

Part Number	Width mm	Length metres	Description	Colour
01600BK11005	110	50	Economy Wax	Black
02300BK11005	110	50	Standard Wax	Black
02100BK11005	110	50	High Performance Wax	Black
05319BK11005	110	50	Performance Wax	Black
03400BK11005	110	50	High Performance Wax/ Resin	Black
03200BK11005	110	50	Premium Wax/Resin	Black
04800BK11005	110	50	Performance Resin	Black
05095BK11005	110	50	High Performance Resin	Black
05100BK11005	110	50	Premium Resin	Black
05319BL11005	110	50	Performance Wax	Blue
05319GD11005	110	50	Performance Wax	Gold
05319RD11005	110	50	Performance Wax	Red
15051	110	50	Premium Resin	White
74918	83	50	Image Lock Resin	Black

All free sample rolls, maximum 5 rolls per item per order

Industrial Ribbons

Return to Index

Rolls supplied on 25mm cores

Recommended Materials	Grade	Part Number	Width mm	Length metres	Rolls Per Box	Weight Per Box kg
Short term uncoated/coated paper labels, tags and receipts	**1600 Economy Wax**	01600BK06045	60	450	18	3.4
		01600BK08345	83	450	18	4.7
		01600BK11045	110	450	18	6.2
		01600BK13145	131	450	12	7.3
		01600BK15645	156	450	18	8.6
		01600BK22045	220	450	6	8.6
Uncoated/coated paper labels and tags	**2300 Performance Wax**	02300BK04045	40	450	12	2.3
		02300BK06045	60	450	12	3.4
		02300BK08345	83	450	12	4.7
		02300BK08945	89	450	12	5.0
		02300BK10245	102	450	12	5.7
		02300BK11045	110	450	12	6.2
		02300BK13145	131	450	12	7.3
		02300BK15645	156	450	12	8.6
		02300BK17045	170	450	12	9.4
		02300BK22045	220	450	12	12.1
Uncoated/coated paper labels and tags and many matte synthetics	**2100 High-Performance Wax**	02100BK04045	40	450	12	2.6
		02100BK06045	60	450	12	4.0
		02100BK08045	80	450	12	5.2
		02100BK08945	89	450	12	5.5
		02100BK10245	102	450	12	6.4
		02100BK10645	106	450	12	6.6
		02100BK11045	110	450	12	7.0
		02100BK13145	131	450	12	8.0
		02100BK15645	156	450	12	10.0
		02100BK17445	174	450	12	11.0
		02100BK22045	220	450	12	13.2
Uncoated/coated paper labels and tags	5319 performance Wax	05319BK08345	83	450	6	3.0
		05319BK08945	89	450	6	3.1
		05319BK10245	102	450	6	3.6
		05319BK11045	110	450	6	3.7

Return to Index

Rolls supplied on 25mm cores

Recommended Materials	Grade	Part Number	Width mm	Length metres	Rolls Per Box	Weight Per Box kg
Short term uncoated/coated paper labels, tags and receipts	**3400 High Performance Wax-Resin**	03400BK04045	40	450	6	1.5
		03400BK06045	60	450	6	2.1
		03400BK08345	83	450	6	2.8
		03400BK08945	89	450	6	3.0
		03400BK10245	102	450	6	3.6
		03400BK11045	110	450	6	3.7
		03400BK13145	131	450	6	4.3
		03400BK15645	156	450	6	5.7
		03400BK17445	174	450	6	5.8
		03400BK22045	220	450	6	7.0
Matte and gloss standard synthetics and some speciality synthetics	**3200 Premium Wax-Resin**	03200BK04045	40	450	6	1.5
		03200BK06045	60	450	6	2.1
		03200BK08045	80	450	6	2.8
		03200BK08945	89	450	6	3.0
		03200BK10245	102	450	6	3.6
		03200BK11045	110	450	6	3.7
		03200BK13145	131	450	6	4.3
		03200BK15645	156	450	6	5.7
		03200BK17445	174	450	6	5.8
		03200BK22045	220	450	6	7.0
Most matte and gloss synthetics both standard speciality	**4800 Performance Resin**	04800BK04045	40	450	12	2.1
		04800BK06045	60	450	12	3.2
		04800BK08045	80	450	12	4.2
		04800BK08945	89	450	12	4.6
		04800BK11045	110	450	12	5.7
		04800BK13145	131	450	12	6.8
		04800BK15645	156	450	12	8.0
		04800BK17445	174	450	12	8.9
		04800BK22045	220	450	12	11.2

Return to Index

Rolls supplied on 25mm cores

Recommended Materials	Grade	Part Number	Width mm	Length metres	Rolls Per Box	Weight Per Box kg
High end synthetics	**5095 High-Performance Resin**	05095BK04045	40	450	6	1.2
		05095BK06045	60	450	6	1.8
		05095BK08345	83	450	6	2.5
		05095BK08945	89	450	6	2.6
		05095BK11045	110	450	6	3.0
		05095BK13145	131	450	6	3.7
		05095BK15445	154	450	6	4.2
		05095BK17445	174	450	6	4.7
		05095BK22045	220	450	6	6.0
High end synthetics and speciality synthetics	**5100 Premium Resin**	05100BK04045	40	450	6	1.2
		05100BK06045	60	450	6	1.8
		05100BK08345	83	450	6	2.5
		05100BK08945	89	450	6	2.6
		05100BK11045	110	450	6	3.0
8000T Lab Resist / Z-Xtreme 5000T	**Image Lock resin**	74776	60	300	6	1.3
		74777	80	300	6	1.5
		74917	110	300	6	2.1

Print Engine Ribbons

Uncoated/coated paper labels and tags	**2300 Performance Wax**	02300BK11090	110	900	6	6.0
		02300BK15690	156	900	6	8.5
		02300BK17090	170	900	6	9.2

Return to Index

Desktop Ribbons

Rolls supplied on 25mm cores unless stated otherwise with special notches for GT800

Printer Compatability	Grade	Part Number	Width mm	Length metres	Rolls Per Box	Weight per Box kg
Desktop Printers Excluding - (LP2824 Plus/ ZD420C/ ZD410) *Ribbons supplied on 12.7mm cores*	2300 Performance Wax	02300GS03307	33	74	12	0.5
		02300GS06407	64	74	12	0.8
		02300GS08407	84	74	12	1.0
		02300GS11007	110	74	12	1.2
	3300 High Performance Wax/ Resin	03300GS06407	64	74	12	0.8
		03300GS08407	84	74	12	0.9
		03300GS11007	110	74	12	1.1
	3200 Premium Wax/Resin	03200GS06407	64	74	12	0.8
		03200GS08407	84	74	12	1.0
		03200GS11007	110	74	12	1.2
	5095 High Performance Resin	05095GS06407	64	74	12	0.7
		05095GS08407	84	74	12	0.9
		05095GS11007	110	74	12	1.1
	Image Lock Resin	74941	64	74	12	0.7
		74942	84	74	12	0.7
GT800 - with special notches	2300 Performance Wax	02300GT11030	110	300	12	4.1
	3200 Premium Wax/Resin	03200GT11030	110	300	12	2.5
ZD and TLP2746	2300 Performance Wax	02300BK06030	60	300	12	2.3
		02300BK08330	83	300	12	3.1
		02300BK11030	110	300	12	4.1
	3200 Premium Wax/Resin	03200BK06030	60	300	6	1.4
		03200BK08330	83	300	6	1.9
		03200BK11030	110	300	6	2.5
	5095 High Performance Resin	05095BK06030	60	300	6	1.2
		05095BK08330	83	300	6	1.7
		05095BK11030	110	300	6	2.0
ZD411/ZD611	2300 Wax	02300ZD25707	56.9	74	12	0.6
	3200 Wax/Resin	03200ZD25707	56.9	74	12	0.6
	5095 Resin	05095ZD25707	56.9	74	12	0.6
TLP 2824/Z	2300 Wax	800132-001	33	74	12	0.4
	2300 Wax	800132-002	56.9	74	12	0.6
	3200 Wax/Resin	800132-101	33	74	12	0.4
	3200 Wax/Resin	800132-102	56.9	74	12	0.6
	5095 Resin	800132-201	33	74	12	0.4
	5095 Resin	800132-202	56.9	74	12	0.6

Return to Index

Coloured Ribbons

Rolls supplied on 25mm cores

Printer Compatability	Part Number	Width mm	Length metres	Colour	Rolls Per Box	Weight Per Box kg
Industrial	05319BL06045	60	450	Blue Wax	24	3.6
	05319BL11045	110	450	Blue Wax	24	6.5
	05319RD06045	60	450	Red Wax	24	3.6
	05319RD11045	110	450	Red Wax	24	6.5
	05319GD11030	110	300	Gold Wax	24	5.6
	74736	60	450	White Resin	6	1.2
	74702	83	450	White Resin	6	2.5
	74912	110	450	White Resin	6	3.0

Other colours are available on request, subject to leadtimes and MOQ

Printer Compatability	Part Number	Width mm	Length metres	Colour	Rolls Per Box	Weight Per Box kg
P4T/RP4T	05555BK110D	110	30	5555 wax/resin	10	1.2
	05095BK110D	110	30	5095 resin	10	1.2

Additional Cores

Printer Compatability	Part Number	Width mm	Description	Rolls Per Box
ZT200 Series	15055	110mm x 25.4 (core size)	Cardboard cores for waste ribbon	10
4' Desktop Printers	15997			10

ChemResist - Premium Resin Ribbon

Printer Compatability	Grade	Part Number	Width mm	Length metres	Rolls Per Box	Weight per Box kg
Desktop	**8000 Premium Resin**	08000CR11007	**110**	**74**	**12**	**0.7**
Industrial	**8000 Premium Resin**	08000CR11030	**110**	**300**	**6**	**2.1**

Cartridge Ribbons

Printer Compatability	Grade	Part Number	Width mm	Length metres	Rolls Per Box	Weight per Box kg
ZD420 Cartridge Printers	1600 Wax	01600CT11007	110	74	6	1.1
	2300 Wax	02300CT11007	110	74	6	1.1
	3300 Wax-Resin	03300CT11007	110	74	6	1.1
	4800 Resin	04800CT11007	110	74	6	1.1
	Image Lock	74783	110	74	6	1.1
	5095 High Performance Resin	05095CT11007	110	74	6	1.1

New Item

Return to Index

EAZIPRICE

Materials:

Z-Perform 1000D
Z-Perform 1000D Removable
Z-Perform 1000T
Z-Perform 1000T Removable
Z-Ultimate 3000T White

Suitable for:

Zebra Engines
Industrial
Desktop

Low MOQ / Orderable via ZSP / 7 day manufacturing leadtime - Made to order / ZipShip discounts apply / 900+ Items
(NOT IN STOCK)

All items supplied in rolls or fanfold packs

EAZIPRICE
FIXED BOX QUANTITIES: ✓

Return to Index

Z-Perform 1000D
Core: 76mm / 3" Outside Diameter: 400mm / 15.75" (Unless specified otherwise)

Part Number	Material Name	Size W x H (mm)	Labels per Roll	Special Features	Minimum Order Quantity (Rolls)	Order in Multiples of	Weight / Roll (KG)
3007698	Z-Perform 1000D	71 x 36	10,280		24	4	4.4
3007749	Z-Perform 1000D	100 x 60	6,000		24	6	6.0
3007891	Z-Perform 1000D	102 x 178	2,950		24	6	8.4
3012850-T	Z-Perform 1000D	152 x 97	4,095		24	2	9.9

Z-Perform 1000D Removable

Part Number	Material Name	Size W x H (mm)	Labels per Roll	Special Features	Minimum Order Quantity (Rolls)	Order in Multiples of	Weight / Roll (KG)
3008221	Z-Perform 1000D Removable	102 x 102	3,000		24	6	5.0
3009687-T	Z-Perform 1000D Removable	102 x 148	2,340	This item has a gap between labels of 4.4mm	24	6	5.7

Z-Perform 1000T

Part Number	Material Name	Size W x H (mm)	Labels per Roll	Special Features	Minimum Order Quantity (Rolls)	Order in Multiples of	Weight / Roll (KG)
3006517	Z-Perform 1000T	38 x 25	15,460		24	6	2.6
3006383	Z-Perform 1000T	48 x 30	19,000		24	6	4.7
3005968	Z-Perform 1000T	51 x 25	15,460		24	6	3.5
3003660	Z-Perform 1000T	51 x 38	10,390		24	12	3.5
3006391	Z-Perform 1000T	55 x 26	24,000		24	6	5.8
3002849	Z-Perform 1000T	70 x 49	8,590		24	6	5.0
3002848	Z-Perform 1000T	75 x 105	4,165		24	12	5.3
3005722	Z-Perform 1000T	76 x 152	2,840		24	4	5.2
3004746	Z-Perform 1000T	80 x 125	3,370		24	4	5.2
3005164	Z-Perform 1000T	90 x 30	13,220		24	6	6.1
3005187-1T	Z-Perform 1000T	90 x 70	4,250		24	3	4.3
3005936	Z-Perform 1000T	92 x 54	7,730		24	6	6.2
3007338	Z-Perform 1000T	100 x 47	8,690	4mm gap	24	6	6.8
3005925	Z-Perform 1000T	100 x 150	2,900		24	6	7.0
3005993	Z-Perform 1000T	102 x 70	6,050		24	6	6.8
3006112	Z-Perform 1000T	102 x 152	2,840		24	6	7.0
3009110-T	Z-Perform 1000T	102 x 216	2,020		24	6	6.9
3002574	Z-Perform 1000T	104 x 111	3,400		24	6	6.3
3011146-T	Z-Perform 1000T	105 x 58	7,091		24	6	7.1
3009584-T	Z-Perform 1000T	105 x 74	5,630		24	6	6.9
3005231	Z-Perform 1000T	110 x 40	10,190		24	3	7.5
3009922-T	Z-Perform 1000T	110 x 60	6,800		24	6	7.2
3004064	Z-Perform 1000T	110 x 70	5,860		24	6	7.4
3012797-T	Z-Perform 1000T	124 x 110	2,500		24	2	5.4
3009405	Z-Perform 1000T	127 x 80	7,160		24	2	11.5
3005963-T	Z-Perform 1000T	129 x 195	1,150		24	2	4.5
3009895-T	Z-Perform 1000T	148 x 210	1,120		24	2	5.4
3007469-1T	Z-Perform 1000T	148 x 210	2,500	Wound inside	24	2	12.0

Return to Index

Z-Perform 1000T (continued)
Core: 76mm / 3" Outside Diameter: 400mm / 15.75" (Unless specified otherwise)

Part Number	Material Name	Size W x H (mm)	Labels per Roll	Special Features	Minimum Order Quantity (Rolls)	Order in Multiples of	Weight / Roll (KG)
3008736	**Z-Perform 1000T**	**148 x 315**	1,390		24	2	10.2
3006883	**Z-Perform 1000T**	**150 x 74**	4,940		24	2	8.7
3011657-T	**Z-Perform 1000T**	**150 x 150**	2,997		24	1	10.6
3005967	**Z-Perform 1000T**	**150 x 210**	2,080		24	2	10.1
3006882	**Z-Perform 1000T**	**152 x 102**	3,630		24	2	8.9
3005969	**Z-Perform 1000T**	**168 x 368**	1,190		24	2	11.3
3007463	**Z-Perform 1000T**	**175 x 83**	5,150		24	1	12.0

Z-Perform 1000T Removable

Part Number	Material Name	Size W x H (mm)	Labels per Roll	Special Features	Minimum Order Quantity (Rolls)	Order in Multiples of	Weight / Roll (KG)
3013918-T	**Z-Perform 1000T Removable**	**51 x 25**	16,109		24	3	3.9
3012918-T	**Z-Perform 1000T Removable**	**124 x 110**	4,103		24	2	9.1
3004559	**Z-Perform 1000T Removable**	**148 x 210**	1,940		24	2	9.7

Z-Perform 1000D
Core: 76mm / 3" Outside Diameter: 200mm / 8" (Unless specified otherwise)

Return to Index

Part Number	Material Name	Size W x H (mm)	Labels per Roll	Special Features	MOQ (Rolls)	Order in Multiples of	Weight / Roll (KG)
3005670-T	Z-Perform 1000D	23 x 38	4,200		28	7	0.7
3008253-T	Z-Perform 1000D	32 x 15	5,000		24	12	0.5
3002549	Z-Perform 1000D	32 x 25	17,700	Supplied 3 across	24	6	2.7
3008442-T	Z-Perform 1000D	32 x 158	960		24	12	0.8
3012920-T	Z-Perform 1000D	35 x 15	9,374		24	6	1.0
3008135*^	Z-Perform 1000D	35 x 210	420		24	6	0.5
3006624-T	Z-Perform 1000D	38 x 19	7,530		24	12	1.0
3008138-T	Z-Perform 1000D	38 x 51	2,890		24	12	1.0
3007004-T	Z-Perform 1000D	39 x 25	6,020		24	12	1.1
3009925-T	Z-Perform 1000D	40 x 40	3,650	4.45mm gap between labels	24	12	1.0
3008048-T	Z-Perform 1000D	47 x 108	2,790	Supplied 2 across	24	6	2.4
3007785-T	Z-Perform 1000D	50 x 45	6,550	Supplied 2 across	24	3	2.5
3007996-T	Z-Perform 1000D	50 x 85	3,510	Supplied 2 across	24	3	2.4
3012580-T*	Z-Perform 1000D	51 x 165	971		24	6	1.4
3007214-T	Z-Perform 1000D	57 x 51	3,100		30	10	1.6
3007770-T	Z-Perform 1000D	60 x 40	3,610		30	10	1.5
3009299-T*	Z-Perform 1000D	64 x 38	3,790		25	5	1.5
3004090	Z-Perform 1000D	64 x 102	1,600		25	5	1.7
3005788	Z-Perform 1000D	67 x 33	4,790		24	8	1.8
3003388	Z-Perform 1000D	67 x 61	2,640		24	8	1.8
3006852-T	Z-Perform 1000D	70 x 44	3,510		24	8	1.9
3003579*^	Z-Perform 1000D	70 x 49	3,432	Perforation every 2nd label	24	4	2.0
881132-050U	Z-Perform 1000D	70 x 51	2,740		24	8	1.7
3007604-T*	Z-Perform 1000D	73 x 165	930		24	8	1.8
3011448-T*	Z-Perform 1000D	74 x 210	725		24	8	1.8
3005144	Z-Perform 1000D	75 x 35	4,390		24	8	2.0
3007007*^	Z-Perform 1000D	76 x 38	6,078		24	4	3.0
3007765-T	Z-Perform 1000D	76 x 76	1,970		24	8	1.9
3010078-T	Z-Perform 1000D	76 x 102	1,490		24	8	1.8
3012579-T*	Z-Perform 1000D	76 x 127	1,255		24	4	2.0
3009654-T	Z-Perform 1000D	76 x 350	440		24	8	1.8
3008583-T	Z-Perform 1000D	80 x 112	2,670	Supplied 2 across	24	4	3.8
3003982	Z-Perform 1000D	83 x 25	5,180		24	4	2.0
880740-139	Z-Perform 1000D	83 x 140	1,040		24	4	2.0
3003459	Z-Perform 1000D	89 x 24	6,200		24	6	2.4
3005381*^	Z-Perform 1000D	89 x 32	6,072	Perforation every label Fanfolded every 6th label	24	3	3.0
3008181-T	Z-Perform 1000D	89 x 51	2,740		24	6	2.1
3005997	Z-Perform 1000D	89 x 127	1,290		24	6	2.3
3006147-T	Z-Perform 1000D	90 x 30	5,020		24	6	2.4
3012215-T	Z-Perform 1000D	90 x 70	2,238		24	6	2.4
3009839-T	Z-Perform 1000D	100 x 30	4,690		24	6	2.4
3011222*^	Z-Perform 1000D	100 x 149	1,000	2 labels per fanfold sheet	24	6	2.4
3007716*^	Z-Perform 1000D	100 x 150	2,400	Available on a roll from ZipShip as part number 3006306-T.	24	6	5.9
3009921-T*	Z-Perform 1000D	102 x 51	2,900		24	6	2.5
3012822-T*	Z-Perform 1000D	102 x 64	2,510	Available from ZipShip without the perforation between labels as part number 3002654	24	6	2.7

*Perforation between labels

^ Fanfold Pack

Return to Index

Z-Perform 1000D (continued)
Core: 76mm / 3" Outside Diameter: 200mm / 8" (Unless specified otherwise)

Part Number	Material Name	Size W x H (mm)	Labels per Roll	Special Features	MOQ (Rolls)	Order in Multiples of	Weight / Roll (KG)
3003970*	Z-Perform 1000D	**102 x 76**	2,110	**Available without the perforation between labels from ZipShip as part number 3007253-T.**	24	6	2.7
3007443*^	Z-Perform 1000D	**102 x 76**	4,080	**Available on a roll from ZipShip as part number 3007253-T.**	24	3	5.1
3009620-T	Z-Perform 1000D	**102 x 127**	1,200		24	6	2.5
3009959-T*	Z-Perform 1000D	**102 x 148**	1,030	**4.4mm gap between labels**	24	6	2.5
3009902-T	Z-Perform 1000D	**102 x 148**	1,030	**4.4mm gap between labels**	24	6	2.5
3007598*^	Z-Perform 1000D	**102 x 152**	2,440	**Available on a roll from ZipShip as part number 3007096-T with a perf between labels or as part number 87809 without a perf between labels**	24	6	6.0
3002930*^	Z-Perform 1000D	**102 x 165**	1,000	**Available on a roll from ZipShip as part number 3007419-T.**	24	3	2.7
3010754-T	Z-Perform 1000D	**102 x 170**	900		24	6	2.5
3010933*^	Z-Perform 1000D	**102 x 178**	1,010	**1 label per fanfold sheet**	24	2	5.9
3009183*^	Z-Perform 1000D	**102 x 178**	2,020	**2 labels per fanfold sheet**	24	2	5.9
3009722*^	Z-Perform 1000D	**102 x 192**	2,500		24	3	7.7
3009723-T	Z-Perform 1000D	**102 x 192**	800		24	6	2.5
3007246-T	Z-Perform 1000D	**102 x 203**	810		24	6	2.7
3005086-T	Z-Perform 1000D	**102 x 210**	790		24	6	2.7
3012615-T	Z-Perform 1000D	**102 x 254**	636		24	6	2.7
3004092	Z-Perform 1000D	**102 x 302**	550		24	6	2.7
3013291-T	Z-Perform 1000D	**102 x Cont**	1	**Continuous**	24	6	2.7
3003648	Z-Perform 1000D	**105 x 42**	3,760		24	3	2.8
3013907-T	Z-Perform 1000D	**105 x 67**	2,340		24	6	2.7
3010197-T	Z-Perform 1000D	**105 x 137**	1,000		24	6	2.3
3009508*^	Z-Perform 1000D	**105 x 152**	1,260		24	3	3.2
3010837-T*	Z-Perform 1000D	**105 x 200**	770		24	4	2.6
3007499-T	Z-Perform 1000D	**106 x 198**	780		24	3	2.7
3008613-T*	Z-Perform 1000D	**108 x 64**	2,340		24	3	2.6
3010926-T	Z-Perform 1000D	**110 x 64**	2,340		24	3	2.7
3013906-T	Z-Perform 1000D	**115 x 45**	3,432		24	4	3.0
3005316*	Z-Perform 1000D	**127 x 102**	1,600		24	4	3.3
3010880-T	Z-Perform 1000D	**148 x 50**	2,940		24	4	3.7
3011131-T	Z-Perform 1000D	**148 x 105**	1,463		24	4	3.7
3009507*^	Z-Perform 1000D	**148 x 210**	1,780	**Available on a roll from Zip Ship as part number 3005103**	24	2	8.7
3006377	Z-Perform 1000D	**152 x 102**	1,600		24	4	4.0
3002512	Z-Perform 1000D	**152 x 216**	760		24	4	4.0
3008453-T*	Z-Perform 1000D	**168 x 220**	700		24	2	4.1

***Perforation between labels**

^ Fanfold Pack

Return to Index

Z-Perform 1000D Removable
Core: 76mm / 3" Outside Diameter: 200mm / 8" (Unless specified otherwise)

Part Number	Material Name	Size W x H (mm)	Labels per Roll	Special Features	MOQ (Rolls)	Order in Multiples of	Weight / Roll (KG)
3008170-T	Z-Perform 1000D Removable	**25 x 76**	1,930		24	6	0.7
3012097-T	Z-Perform 1000D Removable	**30 x 22**	6,571		24	6	0.9
3004876	Z-Perform 1000D Removable	**44 x 38**	3,710		24	6	1.1
3008267-T	Z-Perform 1000D Removable	**47 x 108**	2,810	**Supplied 2 across**	24	6	2.4
3007324-T	Z-Perform 1000D Removable	**65 x 95**	1,550		25	5	1.6
3009904-T	Z-Perform 1000D Removable	**76 x 51**	2,840		24	8	1.8
3009847-T*	Z-Perform 1000D Removable	**76 x 51**	2,840		24	8	1.8
881170-076U	Z-Perform 1000D Removable	**76 x 76**	1,890		24	8	1.9
3011635-T	Z-Perform 1000D Removable	**78 x 40**	3,967		24	8	2.1
3014443-T	Z-Perform 1000D Removable	**80 x 170**	964		24	4	2.2
881176-044U	Z-Perform 1000D Removable	**95 x 44**	3,150		24	6	2.3
3010058	Z-Perform 1000D Removable	**100 x 30**	4,780		24	6	2.5
3010273-T	Z-Perform 1000D Removable	**100 x 50**	2,840		24	6	2.5
3008256-T	Z-Perform 1000D Removable	**100 x 60**	2,410		24	6	2.4
3011161*^	Z-Perform 1000D Removable	**100 x 72**	2,000	**4 labels per fanfold sheet**	24	6	2.5
3009163-T	Z-Perform 1000D Removable	**100 x 100**	1,490		24	6	2.5
3011163*^	Z-Perform 1000D Removable	**100 x 149**	1,000	**2 labels per fanfold sheet**	24	6	2.5
3006569-T*	Z-Perform 1000D Removable	**100 x 150**	1,000		24	6	2.4
3007856-T	Z-Perform 1000D Removable	**100 x 210**	720		24	6	2.4
3010373-T	Z-Perform 1000D Removable	**101 x 220**	690		24	6	2.5
3003735	Z-Perform 1000D Removable	**102 x 64**	2,244		24	6	2.4
3012050-T	Z-Perform 1000D Removable	**102 x 76**	2,102		24	3	2.7
3001369*^	Z-Perform 1000D Removable	**102 x 76**	3,435		24	6	4.5
3004874	Z-Perform 1000D Removable	**102 x 102**	1,460		24	6	2.5
880782-152	Z-Perform 1000D Removable	**102 x 152**	950		24	6	2.4
3005191	Z-Perform 1000D Removable	**102 x 178**	850		24	6	2.5
3007383*^	Z-Perform 1000D Removable	**102 x 178**	1,010		24	6	2.9
3005185-1*^	Z-Perform 1000D Removable	**102 x 178**	2,020		24	2	6.0
3007234-T	Z-Perform 1000D Removable	**102 x 210**	720		24	6	2.5
3004854*^	Z-Perform 1000D Removable	**106 x 48**	4,020		24	3	3.5
3008012-T	Z-Perform 1000D Removable	**110 x 79**	1,850		24	3	2.7
3004270*	Z-Perform 1000D Removable	**148 x 210**	700		24	4	3.5
3005081	Z-Perform 1000D Removable	**148 x 210**	720		24	4	3.6
3008772-T	Z-Perform 1000D Removable	**152 x 102**	1,460		24	4	3.7
3014120-T	Z-Perform 1000D Removable	**175 x 83**	1,947		24	2	4.6

***Perforation between labels**

^ Fanfold Pack

Return to Index

Z-Perform 1000T
Core: 76mm / 3" Outside Diameter: 200mm / 8" (Unless specified otherwise)

Part Number	Material Name	Size W x H (mm)	Labels per Roll	Special Features	MOQ (Rolls)	Order in Multiples of	Weight / Roll (KG)
87522	Z-Perform 1000T	**6 x 30**	30,588	**Supplied 6 across**	24	6	1.5
3009681-T	Z-Perform 1000T	**8 x 10**	40,390	**Supplied 3 across**	24	12	0.9
87521	Z-Perform 1000T	**19 x 6**	71,380	**Supplied 4 across**	24	4	2.3
880000-012	Z-Perform 1000T	**19 x 13**	9,449		24	12	0.5
3002211	Z-Perform 1000T	**22 x 22**	26,930	**Supplied 4 across**	24	4	2.3
86288	Z-Perform 1000T	**22 x 22**	6,690		24	12	0.7
3008246	Z-Perform 1000T	**24 x Cont**	1		24	6	0.9
3001829*	Z-Perform 1000T	**25 x 13**	32,310	**Horizontal and vertical perforation between labels Supplied 3 across**	24	6	2.2
76576	Z-Perform 1000T	**25 x 13**	10,000		24	12	0.7
200279	Z-Perform 1000T	**25 x 25**	12,080	**Supplied 2 across**	24	8	1.3
880002-025	Z-Perform 1000T	**25 x 25**	5,180		24	12	0.6
76520	Z-Perform 1000T	**25 x 32**	4,295		24	12	0.7
3005129	Z-Perform 1000T	**25 x 38**	4,270		24	12	0.8
3004280	Z-Perform 1000T	**25 x 51**	3,090		24	12	0.7
3009689-T	Z-Perform 1000T	**30 x Cont**	1	**Continuous**	24	12	0.8
3006928-T	Z-Perform 1000T	**30 x 40**	3,710		24	12	0.8
3003396	Z-Perform 1000T	**32 x 10**	13,460		24	12	0.9
880004-012	Z-Perform 1000T	**32 x 13**	9,449		24	12	0.8
3001015	Z-Perform 1000T	**32 x 16**	8,000		24	12	0.8
880004-019	Z-Perform 1000T	**32 x 19**	6,742		24	12	0.8
86572-2	Z-Perform 1000T	**32 x 25**	17,499	**Supplied 3 across**	24	6	2.4
200877	Z-Perform 1000T	**32 x 32**	4,866		24	12	0.9
880004-044	Z-Perform 1000T	**32 x 44**	3,150		24	12	0.8
880004-069	Z-Perform 1000T	**32 x 70**	2,054		24	12	0.8
3005497	Z-Perform 1000T	**35 x 19**	7,930		24	12	1.0
3007310-T	Z-Perform 1000T	**35 x 48**	3,440		24	12	1.0
3007638-T	Z-Perform 1000T	**35 x 210**	830		24	12	1.0
880006-012	Z-Perform 1000T	**38 x 13**	9,449		24	12	0.9
86829	Z-Perform 1000T	**38 x 16**	8,920		24	12	1.1
87932*	Z-Perform 1000T	**38 x 16**	9,733	**Perforation every 5th label**	24	12	1.2
3001396	Z-Perform 1000T	**38 x 19**	15,390	**Supplied 2 across**	24	6	2.1
86681	Z-Perform 1000T	**38 x 19**	7,648		24	12	1.1
3005204	Z-Perform 1000T	**38 x 25**	12,330	**Supplied 2 across**	24	6	2.1
86498	Z-Perform 1000T	**38 x 32**	4,866		24	12	1.1
880834-038U	Z-Perform 1000T	**38 x 38**	3,634		24	12	0.9
3003769	Z-Perform 1000T	**38 x 51**	3,170		24	12	1.1
3005247-T	Z-Perform 1000T	**38 x 57**	2,940		28	14	1.1
880006-063	Z-Perform 1000T	**38 x 64**	2,220		24	12	0.9
3005526	Z-Perform 1000T	**38 x 64**	5,280	**Supplied 2 across**	24	6	2.2
3006361-2T	Z-Perform 1000T	**38 x 76**	2,220		24	12	1.1
880834-139U	Z-Perform 1000T	**38 x 140**	1,040		24	12	0.9
3004158	Z-Perform 1000T	**40 x 15**	9,750		24	12	1.1
3009000	Z-Perform 1000T	**40 x 21**	7,400		24	12	1.1
86052	Z-Perform 1000T	**40 x 21**	14,276	**Supplied 2 across**	24	6	2.3
3009002	Z-Perform 1000T	**40 x 30**	5,280		24	12	1.1
3006300	Z-Perform 1000T	**44 x 19**	7,500		24	12	1.2
3005483*^	Z-Perform 1000T	**44 x 25**	12,000	**Supplied 2 across**	24	6	2.5
880008-025	Z-Perform 1000T	**44 x 25**	5,180		24	12	1.1
880008-031	Z-Perform 1000T	**44 x 32**	4,240		24	12	1.1
3005582*	Z-Perform 1000T	**44 x 38**	3,700		24	12	1.1
3007888-T	Z-Perform 1000T	**44 x 38**	8,540	**Supplied 2 across**	24	6	2.6

***Perforation between labels**

^ Fanfold Pack

Return to Index

Z-Perform 1000T (continued)
Core: 76mm / 3" Outside Diameter: 200mm / 8" (Unless specified otherwise)

Part Number	Material Name	Size W x H (mm)	Labels per Roll	Special Features	MOQ (Rolls)	Order in Multiples of	Weight / Roll (KG)
880008-038	Z-Perform 1000T	44 x 38	3,634		24	12	1.1
87682	Z-Perform 1000T	45 x 14	9,748		24	12	1.3
200788-1	Z-Perform 1000T	45 x 30	5,000		24	12	1.2
3008776-T	Z-Perform 1000T	46 x 36	4,490		24	12	1.3
86314	Z-Perform 1000T	47 x 64	2,549		24	12	1.3
3007857-T	Z-Perform 1000T	48 x 30	9,000	Supplied 2 across	24	12	2.2
200733	Z-Perform 1000T	48 x 100	1,000		24	12	0.8
3007268-T	Z-Perform 1000T	50 x 60	2,770		24	6	1.4
3002586	Z-Perform 1000T	51 x 13	21,540	Supplied 2 across	24	3	2.8
880010-012	Z-Perform 1000T	51 x 13	9,449		24	6	1.2
880010-019	Z-Perform 1000T	51 x 19	6,742		24	6	1.2
3002526	Z-Perform 1000T	51 x 25	11,970	Supplied 2 across	24	3	2.7
3004629	Z-Perform 1000T	51 x 25	17,950	Supplied 3 across	24	2	4.2
3007417-T*	Z-Perform 1000T	51 x 25	5,180	Available without the perforation between labels from ZipShip as part number 76171	24	6	1.2
3007045	Z-Perform 1000T	51 x 38	8,540	Supplied 2 across	24	3	2.9
3007417-T*	Z-Perform 1000T	51 x 25	5,180	Available without the perforation between labels from ZipShip as part number 76171	24	6	1.2
3008326-T	Z-Perform 1000T	51 x 30	3,000		24	6	0.8
3007045	Z-Perform 1000T	51 x 38	8,540	Supplied 2 across	24	3	2.9
3002956	Z-Perform 1000T	51 x 40	3,920		24	6	1.3
3007344-T	Z-Perform 1000T	51 x 51	6,530	Supplied 2 across	24	3	2.8
3008172-T	Z-Perform 1000T	51 x 76	4,440	Supplied 2 across	24	3	2.8
880010-076	Z-Perform 1000T	51 x 76	1,890		24	6	1.2
880010-101	Z-Perform 1000T	51 x 102	1,432		24	6	1.2
87284	Z-Perform 1000T	51 x 102	3,244	Supplied 2 across	24	3	2.8
880010-127	Z-Perform 1000T	51 x 127	1,152		24	6	1.2
880010-152	Z-Perform 1000T	51 x 152	950		24	6	1.2
3012296-T*	Z-Perform 1000T	51 x 165	1,083		24	6	1.5
3011217-2T	Z-Perform 1000T	53 x 33	4,790		24	4	1.5
3002583	Z-Perform 1000T	54 x 86	1,920		24	6	1.5
3005547	Z-Perform 1000T	55 x 25	6,230		24	8	1.5
3011175-T	Z-Perform 1000T	55 x 26	6,052		24	6	1.5
880012-012	Z-Perform 1000T	57 x 13	9,449		25	5	1.4
3003451*	Z-Perform 1000T	57 x 19	7,690		25	5	1.6
880012-019	Z-Perform 1000T	57 x 19	6,742		25	5	1.4
880012-025	Z-Perform 1000T	57 x 25	5,180		25	5	1.4
87447*	Z-Perform 1000T	57 x 32	4,240	Available without the perforation between labels from ZipShip as part number 76173	25	5	1.4
3006097	Z-Perform 1000T	57 x 38	4,270		25	5	1.6
880012-050	Z-Perform 1000T	57 x 51	2,740		25	5	1.4
3003943	Z-Perform 1000T	57 x 76	2,100		25	5	1.5
880012-101	Z-Perform 1000T	57 x 102	1,432		25	5	1.4
87592-2	Z-Perform 1000T	60 x 22	6,692		25	5	1.6
3004387PI	Z-Perform 1000T	60 x 30	5,130		25	5	1.6
3007552-T	Z-Perform 1000T	60 x 102	3,360	Supplied 2 across	24	4	3.4
3005553-T*	Z-Perform 1000T	61 x 36	4,660	Small gap (2.1mm)	25	5	1.8
3006961-1T	Z-Perform 1000T	63 x 57	5,000	Supplied 2 across	24	4	3.0
880014-012	Z-Perform 1000T	64 x 13	9,449		25	5	1.5
87544	Z-Perform 1000T	64 x 25	5,000		25	5	1.4
880014-031	Z-Perform 1000T	64 x 32	4,240		25	5	1.5
200835*	Z-Perform 1000T	64 x 37	8,022	Vertical and horizontal perforation between labels 2 across	24	4	3.2

***Perforation between labels**

^ Fanfold Pack

Return to Index

Z-Perform 1000T (continued)
Core: 76mm / 3" Outside Diameter: 200mm / 8" (Unless specified otherwise)

Part Number	Material Name	Size W x H (mm)	Labels per Roll	Special Features	MOQ (Rolls)	Order in Multiples of	Weight / Roll (KG)
880014-038	Z-Perform 1000T	64 x 38	3,634		25	5	1.5
880014-063	Z-Perform 1000T	64 x 64	2,220		25	5	1.5
3004301	Z-Perform 1000T	64 x 102	1,590		25	5	1.7
3009873-T	Z-Perform 1000T	64 x 114	1,460		25	5	1.7
3007100	Z-Perform 1000T	65 x 16	9,250		25	5	1.8
3009953-1	Z-Perform 1000T	65 x 91	1,740		25	5	1.6
3006386	Z-Perform 1000T	68 x 38	3,000		24	4	1.3
880016-012	Z-Perform 1000T	70 x 13	9,449		24	8	1.7
3007533-1T	Z-Perform 1000T	70 x 25	6,170		24	8	2.0
3009257-T	Z-Perform 1000T	70 x 36	4,440		24	8	1.9
880016-038	Z-Perform 1000T	70 x 38	3,634		24	8	1.7
3005668	Z-Perform 1000T	70 x 44	3,700		24	8	1.9
880016-050	Z-Perform 1000T	70 x 51	2,740		24	8	1.6
3005546	Z-Perform 1000T	70 x 57	2,920		24	8	1.9
3005878*	Z-Perform 1000T	70 x 70	2,410		24	8	1.9
880016-101	Z-Perform 1000T	70 x 102	1,432		24	8	1.7
3003734	Z-Perform 1000T	70 x 150	1,120		24	8	1.9
3007195-T	Z-Perform 1000T	73 x Cont	1	Continuous	24	8	2.0
3014118-T*	Z-Perform 1000T	74 x 207	871		24	8	2.1
3006239*^	Z-Perform 1000T	74 x 210	1,070	Available on a roll from ZipShip as part number 3005869.	24	4	2.6
3004233	Z-Perform 1000T	74 x Cont	1	Continuous 5mm left hand trim	24	8	1.9
3005414-T	Z-Perform 1000T	75 x 35	4,620		24	8	2.1
3007027-T	Z-Perform 1000T	75 x 48	3,440		24	8	2.0
3007876-T	Z-Perform 1000T	75 x 105	1,630		24	8	2.0
3001733	Z-Perform 1000T	75 x 125	1,000		24	8	1.5
87492	Z-Perform 1000T	76 x 13	10,707		24	8	2.1
880018-019	Z-Perform 1000T	76 x 19	6,742		24	8	1.8
200972	Z-Perform 1000T	76 x 25	5,570		24	8	1.9
3011246-T*	Z-Perform 1000T	76 x 25	6,054		24	8	2.1
3012942-T	Z-Perform 1000T	76 x 35	4,785		24	4	2.2
3003471*	Z-Perform 1000T	76 x 38	3,634	Available from ZipShip without a perf between labels as part number 880018-038	24	8	1.7
3004247	Z-Perform 1000T	76 x 44	3,590		24	8	2.1
3002066*	Z-Perform 1000T	76 x 76	2,150	Available without the perforation between labels from ZipShip as part number 76522.	24	8	2.1
3012176-T*	Z-Perform 1000T	76 x 102	1,740		24	8	2.2
3005718*	Z-Perform 1000T	76 x 127	1,152	Available without the perforation between labels from ZipShip as part number 880018-127.	24	8	1.8
3005171-T*	Z-Perform 1000T	76 x 152	1,000		24	8	1.9
880018-152	Z-Perform 1000T	76 x 152	950		24	8	1.8
3005262	Z-Perform 1000T	76 x 185	940		24	8	2.0
3002067	Z-Perform 1000T	80 x 23	6,610		24	4	2.1
3006704-T	Z-Perform 1000T	80 x 50	6,000	Supplied 2 across	24	4	4.0
86378	Z-Perform 1000T	80 x 50	3,150		24	4	2.1
3012996-T*	Z-Perform 1000T	80 x 50	2,981		24	4	2.0
3011781	Z-Perform 1000T	80 x 80	2,208		24	4	2.3
3012958-T*	Z-Perform 1000T	80 x 160	1,105	5.1mm gap between labels	24	4	2.3
880020-025	Z-Perform 1000T	83 x 25	5,180		24	4	1.9
880020-031	Z-Perform 1000T	83 x 32	4,240		24	4	1.9

***Perforation between labels**

^ Fanfold Pack

Return to Index

Z-Perform 1000T (continued)
Core: 76mm / 3" Outside Diameter: 200mm / 8" (Unless specified otherwise)

Part Number	Material Name	Size W x H (mm)	Labels per Roll	Special Features	MOQ (Rolls)	Order in Multiples of	Weight / Roll (KG)
880020-038	Z-Perform 1000T	**83 x 38**	3,634		24	4	2.0
880848-044U	Z-Perform 1000T	**83 x 45**	3,150		24	4	2.0
880020-076	Z-Perform 1000T	**83 x 76**	1,890		24	4	2.0
76176-1	Z-Perform 1000T	**83 x 140**	1,040		24	4	1.9
3007740*^	Z-Perform 1000T	**83 x 152**	690		24	8	1.4
3004624	Z-Perform 1000T	**83 x Cont**	1	**Continuous**	24	6	2.0
87915-1	Z-Perform 1000T	**86 x 51**	3,149		24	6	2.3
200106	Z-Perform 1000T	**86 x 203**	820		24	6	2.2
3007957-T	Z-Perform 1000T	**88 x 20**	7,930		24	6	2.4
880022-031	Z-Perform 1000T	**89 x 32**	4,240		24	6	2.1
87111*	Z-Perform 1000T	**89 x 38**	3,634	**Available without the perforation between labels from ZipShip as part number 880022-038.**	24	6	2.1
880022-044	Z-Perform 1000T	**89 x 44**	3,150		24	6	2.1
3008820-T	Z-Perform 1000T	**89 x 48**	3,470		24	6	2.5
880850-050U	Z-Perform 1000T	**89 x 51**	2,740		24	6	2.1
880022-088	Z-Perform 1000T	**89 x 89**	1,629		24	6	2.1
3007937*^	Z-Perform 1000T	**89 x 98**	3,200		24	3	4.4
880022-101	Z-Perform 1000T	**89 x 102**	1,432		24	6	2.1
3004786	Z-Perform 1000T	**89 x 140**	1,210		24	6	2.4
880022-203	Z-Perform 1000T	**89 x 203**	726		24	6	2.1
3010366-1T	Z-Perform 1000T	**90 x 60**	2,700		24	6	2.4
3002751	Z-Perform 1000T	**90 x 70**	2,350		24	6	2.4
3010657-T*	Z-Perform 1000T	**90 x 124**	1,350		24	6	2.4
3007232-T	Z-Perform 1000T	**90 x 145**	1,160		24	6	2.4
3010656-T*	Z-Perform 1000T	**90 x 170**	990		24	6	2.4
3005937	Z-Perform 1000T	**92 x 54**	3,000		24	6	2.5
3001698*	Z-Perform 1000T	**95 x 50**	3,196		24	6	2.5
3004294	Z-Perform 1000T	**95 x 51**	3,170		24	6	2.6
880024-063	Z-Perform 1000T	**95 x 64**	2,220		24	6	2.2
3005445-1	Z-Perform 1000T	**95 x 76**	2,220		24	6	2.6
3005110	Z-Perform 1000T	**95 x 114**	1,500		24	6	2.6
880024-165	Z-Perform 1000T	**95 x 165**	880		24	6	2.2
3002132	Z-Perform 1000T	**97 x 241**	700		24	6	2.6
3007507-T	Z-Perform 1000T	**98 x 54**	3,080		24	6	2.7
3006301	Z-Perform 1000T	**100 x 30**	5,000		24	6	2.6
86016	Z-Perform 1000T	**100 x 35**	4,460		24	6	2.7
3007537-T	Z-Perform 1000T	**100 x 60**	3,000		24	3	2.9
3008689-T	Z-Perform 1000T	**100 x 120**	1,420		24	6	2.8
3003162-T	Z-Perform 1000T	**100 x 125**	1,350		24	6	2.7
3005413	Z-Perform 1000T	**102 x 13**	11,100		24	3	2.8
3005774	Z-Perform 1000T	**102 x 22**	5,000		24	6	2.0
880026-025	Z-Perform 1000T	**102 x 25**	5,180		24	6	2.3
880026-031	Z-Perform 1000T	**102 x 32**	4,240		24	6	2.4
800664-155*	Z-Perform 1000T	**102 x 38**	4,225	**Available without the perforation between labels from ZipShip as part number 880026-038.**	24	6	2.7
3007143-T	Z-Perform 1000T	**102 x 44**	3,700		24	3	2.8
3006039*^	Z-Perform 1000T	**102 x 51**	4,260	**Available on a roll from ZipShip as part number 3005676.**	24	3	3.7
3002801*	Z-Perform 1000T	**102 x 64**	2,220	**Available without the perforation between labels from ZipShip as part number 76179.**	24	6	2.3

***Perforation between labels**

^ Fanfold Pack

Return to Index

Z-Perform 1000T (continued)
Core: 76mm / 3" Outside Diameter: 200mm / 8" (Unless specified otherwise)

Part Number	Material Name	Size W x H (mm)	Labels per Roll	Special Features	MOQ (Rolls)	Order in Multiples of	Weight / Roll (KG)
3008028*^	Z-Perform 1000T	**102 x 64**	3,000	**Available on a roll from ZipShip as part number 76179.**	24	3	3.1
3008529-5T	Z-Perform 1000T	**102 x 75**	2,270	**Left and right margin = 3.175mm each. Total web width = 107.95mm**	24	4	2.9
3008472*^	Z-Perform 1000T	**102 x 76**	2,300		24	3	2.9
86938*	Z-Perform 1000T	**102 x 76**	2,005	**Available without the perforation between labels from ZipShip as part number 880026-076.**	24	6	2.5
3003219-1*	Z-Perform 1000T	**102 x 102**	1,630	**Available without the perforation between labels from ZipShip as part number 76523.**	24	6	2.7
86860*^	Z-Perform 1000T	**102 x 102**	2,000	**Available on a roll from ZipShip as part number 76523.**	24	3	3.3
3003955*	Z-Perform 1000T	**102 x 127**	1,280	**Available without the perforation between labels from ZipShip as part number 880026-127.**	24	6	2.7
3007956*^	Z-Perform 1000T	**102 x 149**	2,570		24	6	6.1
3008027-1*^	Z-Perform 1000T	**102 x 152**	1,000	**Available on a roll from ZipShip as part number 87985.**	24	3	2.4
3010363*^	Z-Perform 1000T	**102 x 152**	2,000	**Available on a roll from ZipShip as part number 87985.**	24	3	5.0
3005235*	Z-Perform 1000T	**102 x 165**	880	**Available without the perforation between labels from ZipShip as part number 76181.**	24	6	2.3
3004275	Z-Perform 1000T	**102 x 178**	940		24	6	2.7
3012336-T	Z-Perform 1000T	**102 x 201**	897		24	6	2.9
3004916*	Z-Perform 1000T	**102 x 203**	850	**Available without the perforation between labels from ZipShip as part number 880026-203.**	24	6	2.8
3011515*^	Z-Perform 1000T	**102 x 203**	1,425	**Available on a roll from ZipShip as part number 880026-203**	24	3	4.7
3002008	Z-Perform 1000T	**102 x 302**	560		24	6	2.7
3005737-T	Z-Perform 1000T	**102 x Cont**	1	**Continuous**	24	6	2.7
3003790	Z-Perform 1000T	**105 x 17**	8,450		24	3	2.8
3003526-1	Z-Perform 1000T	**105 x 48**	3,370		24	3	2.8
3005540*	Z-Perform 1000T	**105 x 74**	2,310		24	3	2.9
3008777-T	Z-Perform 1000T	**105 x 74**	2,290		24	3	2.9
3012219-T*	Z-Perform 1000T	**105 x 148**	1,127	**Available from ZipShip without a perf between labels as part number 200957**	24	6	2.8
3008029-T	Z-Perform 1000T	**105 x 181**	960		24	3	2.9
3002234*	Z-Perform 1000T	**106 x 48**	3,370		24	3	2.9
3003209*	Z-Perform 1000T	**106 x 76**	2,150		24	3	2.8
3012338-T	Z-Perform 1000T	**107 x 251**	717		24	6	3.1
3011473-T	Z-Perform 1000T	**110 x 105**	1,688		24	3	3.1
3012337-T	Z-Perform 1000T	**110 x 225**	797		24	4	3.1
3007142-T	Z-Perform 1000T	**110 x 245**	695		24	3	2.9
3007997-T	Z-Perform 1000T	**110 x Cont**	1	**Continuous**	24	3	2.6
3004879*	Z-Perform 1000T	**111 x 162**	1,040		24	3	3.0
3003143	Z-Perform 1000T	**113 x 152**	1,100		24	4	3.0

***Perforation between labels**

^ Fanfold Pack

Return to Index

Z-Perform 1000T (continued)
Core: 76mm / 3" Outside Diameter: 200mm / 8" (Unless specified otherwise)

Part Number	Material Name	Size W x H (mm)	Labels per Roll	Special Features	MOQ (Rolls)	Order in Multiples of	Weight / Roll (KG)
3002313*^	Z-Perform 1000T	**114 x 140**	3,170		24	2	7.9
880028-139	Z-Perform 1000T	**114 x 140**	1,040		24	4	2.7
3008545-T	Z-Perform 1000T	**115 x 73**	2,310		24	4	3.1
3005966	Z-Perform 1000T	**116 x 149**	1,155		24	4	3.1
3006809-T	Z-Perform 1000T	**120 x 70**	2,410		24	4	3.3
87647	Z-Perform 1000T	**121 x 79**	2,059		24	4	3.2
3005876-T	Z-Perform 1000T	**121 x 121**	1,420		24	4	3.3
880030-038	Z-Perform 1000T	**127 x 38**	3,634		24	4	3.0
880030-076	Z-Perform 1000T	**127 x 76**	1,890		24	4	3.0
880030-101	Z-Perform 1000T	**127 x 102**	1,432		24	4	3.0
87541	Z-Perform 1000T	**127 x 203**	823		24	4	3.3
3006411-T	Z-Perform 1000T	**129 x 195**	750		24	4	3.0
3002074	Z-Perform 1000T	**138 x Cont**	1	**Continuous**	24	4	3.6
3005516	Z-Perform 1000T	**140 x 70**	1,250		24	4	2.0
86685*^	Z-Perform 1000T	**148 x 210**	1,000	**Available on a roll from ZipShip as part number 3001699.**	24	4	4.8
3008737-T*	Z-Perform 1000T	**148 x 315**	560		24	4	4.0
3009192-T	Z-Perform 1000T	**148 x Cont**	1	**Continuous**	24	4	4.0
3008482-T*	Z-Perform 1000T	**149 x 188**	930		24	4	4.0
87742-1T*	Z-Perform 1000T	**150 x 67**	2,000		24	4	3.3
3003533	Z-Perform 1000T	**150 x 95**	1,700		24	4	3.9
3002137*	Z-Perform 1000T	**150 x 95**	1,740		24	4	4.0
3011656-T	Z-Perform 1000T	**150 x 150**	1,120		24	4	4.0
3002960*	Z-Perform 1000T	**150 x 150**	1,120		24	4	4.0
3007739-1*^	Z-Perform 1000T	**150 x 210**	1,070		24	2	5.2
3008083-T	Z-Perform 1000T	**150 x 210**	830		24	4	4.1
880034-050	Z-Perform 1000T	**152 x 51**	2,740		24	4	3.5
880034-095	Z-Perform 1000T	**152 x 95**	1,524		24	4	3.5
880034-101	Z-Perform 1000T	**152 x 102**	1,432	**Available with a perforation between labels from ZipShip as part number 3003632.**	24	4	3.5
3007532-T	Z-Perform 1000T	**152 x 127**	1,350		24	4	4.1
3007925-T*	Z-Perform 1000T	**152 x 216**	800	**Available without the perforation between labels from ZipShip as part number 76186.**	24	4	4.1
3011665-T	Z-Perform 1000T	**152 x 254**	708		24	4	4.3
3006808-T	Z-Perform 1000T	**158 x 137**	1,260		24	4	4.3
3008436-1T	Z-Perform 1000T	**159 x 314**	560		24	2	4.3
3002567*^	Z-Perform 1000T	**168 x 210**	1,250		24	2	6.8
3003224	Z-Perform 1000T	**170 x 49**	3,260		24	2	4.5
3001334*	Z-Perform 1000T	**170 x 102**	1,622		24	2	4.4
200571*	Z-Perform 1000T	**183 x 254**	682		24	2	5.0
3003302	Z-Perform 1000T	**183 x 254**	660		24	2	4.8
3007242-T*	Z-Perform 1000T	**210 x 27**	5,840		24	2	5.7
3007072-2T	Z-Perform 1000T	**210 x 59**	2,830		24	2	5.7
3006583-T	Z-Perform 1000T	**210 x 148**	1,000		24	2	4.9
3008317-T*	Z-Perform 1000T	**210 x 149**	1,160		24	2	5.7
86089	Z-Perform 1000T	**216 x 152**	1,092		24	2	5.7
3006173	Z-Perform 1000T Removable	**25 x 38**	4,260		24	12	0.8
3010511-T	Z-Perform 1000T Removable	**26 x 13**	10,330		24	6	0.7
3004634	Z-Perform 1000T Removable	**29 x 17**	8,720		24	12	0.9

***Perforation between labels**

^ Fanfold Pack

Return to Index

Z-Perform 1000T Removable
Core: 76mm / 3" Outside Diameter: 200mm / 8" (Unless specified otherwise)

Part Number	Material Name	Size W x H (mm)	Labels per Roll	Special Features	MOQ (Rolls)	Order in Multiples of	Weight / Roll (KG)
3004634	Z-Perform 1000T Removable	**29 x 17**	8,720		24	12	0.9
3005939	Z-Perform 1000T Removable	**30 x 22**	18,580	**Supplied 3 across**	24	6	2.2
3003634	Z-Perform 1000T Removable	**32 x 19**	7,470		24	12	0.9
3003765	Z-Perform 1000T Removable	**32 x 25**	5,690		24	12	0.9
3009446-T	Z-Perform 1000T Removable	**32 x 32**	5,000	**Supplied 2 across**	24	12	0.9
3003237	Z-Perform 1000T Removable	**38 x 16**	8,720		24	12	1.1
3005183	Z-Perform 1000T Removable	**38 x 25**	10,350	**Supplied 2 across**	24	6	1.8
3006215-T	Z-Perform 1000T Removable	**38 x 57**	2,500		28	14	0.9
3004128	Z-Perform 1000T Removable	**38 x 76**	2,000		24	12	1.0
3005672	Z-Perform 1000T Removable	**44 x 38**	3,810		24	12	1.2
880694-025	Z-Perform 1000T Removable	**51 x 25**	5,180		24	6	1.2
3013610-T	Z-Perform 1000T Removable	**51 x 25**	12,858	**Supplied 2 across**	24	3	3.1
3004069	Z-Perform 1000T Removable	**51 x 76**	2,050		24	6	1.3
880876-031U	Z-Perform 1000T Removable	**57 x 32**	4,240		25	5	1.4
3006208	Z-Perform 1000T Removable	**60 x 30**	4,750		25	5	1.5
880878-031U	Z-Perform 1000T Removable	**64 x 32**	4,240		25	5	1.5
3004028-1	Z-Perform 1000T Removable	**65 x91**	1,740		25	5	1.7
3003725	Z-Perform 1000T Removable	**70 x 32**	4,650		24	8	1.8
3006714-T	Z-Perform 1000T Removable	**70 x 44**	3,000		24	8	1.6
3008411-T*	Z-Perform 1000T Removable	**74 x 210**	740		24	8	1.8
880702-019	Z-Perform 1000T Removable	**76 x 19**	6,742		24	8	1.8
880702-025	Z-Perform 1000T Removable	**76 x 25**	5,180		24	8	1.8
3012681-T	Z-Perform 1000T Removable	**76 x 38**	4,458		24	8	2.3
880702-050	Z-Perform 1000T Removable	**76 x 51**	2,740		24	8	1.8
880702-076	Z-Perform 1000T Removable	**76 x 76**	1,890		24	8	1.8
3003910	Z-Perform 1000T Removable	**83 x 25**	5,690		24	4	2.2
880704-044	Z-Perform 1000T Removable	**83 x 44**	3,150		24	4	2.0
880884-050U	Z-Perform 1000T Removable	**83 x 51**	2,740		24	4	2.0
3004657	Z-Perform 1000T Removable	**89 x 25**	5,810		24	6	2.4
3009377-T	Z-Perform 1000T Removable	**89 x 38**	3,970		24	6	2.3
3004762	Z-Perform 1000T Removable	**89 x 140**	1,040		24	6	2.1
3001824-1	Z-Perform 1000T Removable	**90 x 145**	1,160		24	6	2.4
880708-031	Z-Perform 1000T Removable	**95 x 32**	4,240		24	6	2.3

***Perforation between labels**

^ Fanfold Pack

Return to Index

Z-Perform 1000T Removable (continued)
Core: 76mm / 3" Outside Diameter: 200mm / 8" (Unless specified otherwise)

Part Number	Material Name	Size W x H (mm)	Labels per Roll	Special Features	MOQ (Rolls)	Order in Multiples of	Weight / Roll (KG)
3007651-T*	Z-Perform 1000T Removable	**95 x 51**	2,910		24	6	2.4
3006795	Z-Perform 1000T Removable	**100 x 150**	1,000		24	6	2.4
3011913-T*	Z-Perform 1000T Removable	**100 x 150**	1,000		24	6	2.4
3006047	Z-Perform 1000T Removable	**102 x 51**	2,910		24	6	2.6
3007449-T	Z-Perform 1000T Removable	**102 x 64**	2,220		24	6	2.4
880710-069	Z-Perform 1000T Removable	**102 x 70**	2,054		24	6	2.4
880890-076U	Z-Perform 1000T Removable	**102 x 76**	1,890		24	6	2.4
880710-101	Z-Perform 1000T Removable	**102 x 102**	1,432		24	6	2.4
3011100*^	Z-Perform 1000T Removable	**102 x 102**	2,018	**2 labels per fanfold sheet**	24	3	3.4
3013947-T*	Z-Perform 1000T Removable	**102 x 127**	1,411		24	6	3.0
3009773-T	Z-Perform 1000T Removable	**102 x 148**	1,170	**Non-standard gap between labels of 4.4mm Roll outer diameter = 216mm**	24	6	2.8
3003793	Z-Perform 1000T Removable	**102 x 152**	1,040		24	6	2.6
3008156-T	Z-Perform 1000T Removable	**104 x 75**	2,020		24	3	2.6
3008412-T*	Z-Perform 1000T Removable	**105 x 48**	3,100		24	3	2.7
3006491-T*	Z-Perform 1000T Removable	**105 x 148**	1,030	**Non-standard gap between labels of 4.4mm**	24	3	2.6
3004422*^	Z-Perform 1000T Removable	**106 x 48**	4,020		24	3	3.5
3002802	Z-Perform 1000T Removable	**108 x 38**	3,000		24	3	2.1
3010448-T	Z-Perform 1000T Removable	**110 x 70**	2,250		24	3	2.9
3011130-T	Z-Perform 1000T Removable	**120 x 162**	1,003		24	4	3.2
3007758-T*	Z-Perform 1000T Removable	**148 x 105**	1,460		24	4	3.7
3002436*^	Z-Perform 1000T Removable	**148 x 210**	1,000		24	2	5.0
3008040-T	Z-Perform 1000T Removable	**148 x 210**	740		24	4	3.7
3010586-T*	Z-Perform 1000T Removable	**148 x 210**	740		24	4	3.7
3002959*	Z-Perform 1000T Removable	**152 x 102**	1,590		24	4	4.0
3003504	Z-Perform 1000T Removable	**152 x 203**	800		24	4	4.0

***Perforation between labels**

^ Fanfold Pack

Return to Index

Z-Ultimate 3000T White
Core: 76mm / 3" Outside Diameter: 200mm / 8" (Unless specified otherwise)

Part Number	Material Name	Size W x H (mm)	Labels per Roll	Special Features	MOQ (Rolls)	Order in Multiples of	Weight / Roll (KG)
200502*	Z-Ultimate 3000T White	**6 x 19**	91,630	**Supplied 11 across**	12	6	0.3
3012007-T	Z-Ultimate 3000T White	**8 x 8**	16,663	**Non-Standard trims of 8.7mm**	12	4	0.8
3010274	Z-Ultimate 3000T White	**8 x 10**	14,430	**Non-Standard trims of 6mm**	12	4	0.6
3009960	Z-Ultimate 3000T White	**9 x 10**	14,430	**Non-Standard trims of 6mm**	12	4	0.4
3010360	Z-Ultimate 3000T White	**10 x 10**	14,430	**Non-Standard trims of 5.033mm**	12	6	0.6
3006938	Z-Ultimate 3000T White	**10 x 10**	14,300	**Non-Standard trims of 10mm**	12	6	0.9
3001531	Z-Ultimate 3000T White	**11 x 11**	63,570	**Round Supplied 5 across**	15	5	0.4
3010901	Z-Ultimate 3000T White	**15 x 15**	10,040	**Non-standard trims of 3mm**	12	6	0.6
3013541-T	Z-Ultimate 3000T White	**18 x 21**	10,000	**Supplied 3 across Short roll length of 79.38M**	12	6	0.8
87302	Z-Ultimate 3000T White	**19 x 6**	50,000	**Supplied 4 across**	12	4	1.6
3001284	Z-Ultimate 3000T White	**19 x 8**	64,840	**Supplied 4 across**	12	4	2.4
3010844	Z-Ultimate 3000T White	**19 x 19**	8,240		12	6	0.6
3006486	Z-Ultimate 3000T White	**19 x 44**	3,810		12	6	0.6
3010243	Z-Ultimate 3000T White	**20 x 10**	14,150		15	5	0.6
3008149	Z-Ultimate 3000T White	**20 x 13**	11,000		12	6	0.6
3007898	Z-Ultimate 3000T White	**20 x 15**	10,020		12	6	0.7
3012351-T	Z-Ultimate 3000T White	**20 x 20**	8,331	**Non-standard trims of 2.7 mm**	16	8	0.7
3010847	Z-Ultimate 3000T White	**20 x 20**	8,240		12	6	0.7
3006096	Z-Ultimate 3000T White	**20 x 180**	3,980	**Supplied 4 across**	12	6	0.6
3006402*	Z-Ultimate 3000T White	**20 x 185**	3,880	**Supplied 4 across**	12	6	0.6
3007278	Z-Ultimate 3000T White	**21 x 11**	12,710		12	6	0.7
3004240	Z-Ultimate 3000T White	**22 x 6**	14,795		16	8	0.5
3005357	Z-Ultimate 3000T White	**22 x 18**	8,640		12	6	0.7
3010200	Z-Ultimate 3000T White	**22 x Cont**	1	**Continuous**	16	8	0.5
3005460	Z-Ultimate 3000T White	**23 x 23**	14,770	**Round Supplied 2 across Non-Standard gap back of 1.606mm**	12	6	0.7
3010189	Z-Ultimate 3000T White	**23 x 30**	5,500		12	6	0.8
3011412*	Z-Ultimate 3000T White	**25 x 6**	19,440		12	6	0.8
87989	Z-Ultimate 3000T White	**25 x 7**	29,010	**Supplied 2 across**	12	6	0.6
3010947	Z-Ultimate 3000T White	**25 x 7**	17,760		12	6	0.8
76146	Z-Ultimate 3000T White	**25 x 9**	13,360		12	6	0.7
3001392	Z-Ultimate 3000T White	**25 x 10**	10,000	**Supplied 2 across**	12	6	0.3
3007710	Z-Ultimate 3000T White	**25 x 10**	40,000	**Supplied 3 across**	12	4	2.3
3002533	Z-Ultimate 3000T White	**25 x 10**	14,300		12	6	0.8
3011791-T	Z-Ultimate 3000T White	**25 x 11**	14,429		12	6	0.8

***Perforation between labels**

^ Fanfold Pack

Return to Index

Z-Ultimate 3000T White (continued)
Core: 76mm / 3" Outside Diameter: 200mm / 8" (Unless specified otherwise)

Part Number	Material Name	Size W x H (mm)	Labels per Roll	Special Features	MOQ (Rolls)	Order in Multiples of	Weight / Roll (KG)
880328-025	Z-Ultimate 3000T White	25 x 25	5,180		12	4	0.6
3010187	Z-Ultimate 3000T White	25 x 13	35,960	Supplied 3 across	12	6	0.8
880328-152	Z-Ultimate 3000T White	25 x 152	950		12	6	0.6
3007912	Z-Ultimate 3000T White	27 x 10	14,090		12	6	0.9
3012727-T	Z-Ultimate 3000T White	27 x 15	10,231		12	6	0.9
3008758	Z-Ultimate 3000T White	28 x 8	16,110		12	6	0.9
3006939	Z-Ultimate 3000T White	28 x 17	9,200		12	6	0.8
3005245	Z-Ultimate 3000T White	29 x 42	4,090		12	6	0.8
3013542-T	Z-Ultimate 3000T White	30 x 8	10,000	Supplied 2 across Short roll of 55.56M	12	4	0.6
3009787-T	Z-Ultimate 3000T White	30 x 10	13,990		12	6	1.0
3009937-T	Z-Ultimate 3000T White	30 x 12	11,260		12	6	0.9
3008713	Z-Ultimate 3000T White	30 x 20	7,780		12	6	0.9
3009572-T	Z-Ultimate 3000T White	30 x 22	21,640	Supplied 3 across	12	3	2.9
3011378	Z-Ultimate 3000T White	30 x 24	6,861		12	6	0.8
3011421	Z-Ultimate 3000T White	30 x 25	6,480	Left and right margin = 2.5mm each. Total web width = 35mm	12	6	1.0
3013135-T	Z-Ultimate 3000T White	30 x 30	4,557		12	6	0.8
3013335-T	Z-Ultimate 3000T White	30 x 30	11,108	Supplied 2 across	15	5	2.0
3013786-T	Z-Ultimate 3000T White	30 x 38	4,486		12	6	1.0
3011586	Z-Ultimate 3000T White	30 x 245	747		12	6	1.0
3013279-T	Z-Ultimate 3000T White	32 x 6	15,710		12	6	0.8
3008686	Z-Ultimate 3000T White	32 x 6	6,000		12	6	0.3
3009337-T	Z-Ultimate 3000T White	32 x 10	13,080		12	6	1.0
3006998	Z-Ultimate 3000T White	32 x 16	9,540		12	6	0.9
880330-019	Z-Ultimate 3000T White	32 x 19	6,742		12	12	7.6
880330-025	Z-Ultimate 3000T White	32 x 25	5,180		12	6	0.8
3009708-T	Z-Ultimate 3000T White	32 x Cont	1	Continuous	12	6	0.9
87738	Z-Ultimate 3000T White	35 x 8	17,350		15	5	1.1
3010257	Z-Ultimate 3000T White	35 x 12	11,540		15	5	1.0
3004055	Z-Ultimate 3000T White	38 x 7	14,510		12	6	0.9
200178	Z-Ultimate 3000T White	38 x 10	12,150	Square Corners	12	3	0.9
3013803-T*	Z-Ultimate 3000T White	38 x 13	11,664		12	6	1.2
3009782	Z-Ultimate 3000T White	38 x 17	9,110		12	6	1.1
76775	Z-Ultimate 3000T White	38 x 19	13,640	Supplied 2 across	12	6	0.0
3004538	Z-Ultimate 3000T White	38 x 89	1,620		12	6	0.9
3010685	Z-Ultimate 3000T White	38 x Cont	1	Continuous	12	6	1.0
3003275	Z-Ultimate 3000T White	40 x 15	9,540		12	6	1.2
3007003	Z-Ultimate 3000T White	40 x 20	5,000		12	6	0.7
3013463-T	Z-Ultimate 3000T White	40 x 25	6,861	Gap back of 1.9875mm	12	6	1.3
3012756-T	Z-Ultimate 3000T White	40 x 30	4,616		12	6	1.1
86608	Z-Ultimate 3000T White	40 x 40	4,266		15	5	1.2
3006738	Z-Ultimate 3000T White	40 x 60	2,860		15	5	1.2
3013243-T	Z-Ultimate 3000T White	40 x 100	1,500		12	6	1.1
3014038-T	Z-Ultimate 3000T White	41 x 125	1,458		12	6	1.3
3008120	Z-Ultimate 3000T White	44 x 17	2,000	Short roll length of 41.28M	12	6	1.3
3009585	Z-Ultimate 3000T White	44 x 19	8,240		12	6	1.4
3007228	Z-Ultimate 3000T White	44 x 22	7,150		12	6	1.4

***Perforation between labels**
^ Fanfold Pack

Return to Index

Z-Ultimate 3000T White (continued)
Core: 76mm / 3" Outside Diameter: 200mm / 8" (Unless specified otherwise)

Part Number	Material Name	Size W x H (mm)	Labels per Roll	Special Features	MOQ (Rolls)	Order in Multiples of	Weight / Roll (KG)
880334-031	Z-Ultimate 3000T White	**44 x 32**	4,240		12	4	1.0
880334-050	Z-Ultimate 3000T White	**44 x 51**	2,740		12	6	1.0
3009675-T	Z-Ultimate 3000T White	**45 x 15**	10,040		12	6	1.3
3004000	Z-Ultimate 3000T White	**47 x 9**	12,170		12	6	1.1
3008854	Z-Ultimate 3000T White	**47 x 19**	8,060		12	6	1.3
3011666-T	Z-Ultimate 3000T White	**47 x 26**	6,305		12	4	1.5
3009461-T	Z-Ultimate 3000T White	**47 x 84**	2,100		12	3	1.4
3012856-T	Z-Ultimate 3000T White	**47 x Cont**	1	**Continuous**	12	6	1.5
3001811	Z-Ultimate 3000T White	**48 x 90**	1,970		16	8	1.4
86010	Z-Ultimate 3000T White	**50 x 15**	8,160		12	6	1.2
3010984	Z-Ultimate 3000T White	**51 x 6**	19,240		12	6	1.5
3010055	Z-Ultimate 3000T White	**51 x 10**	14,980		12	6	1.5
76674	Z-Ultimate 3000T White	**51 x 20**	6,730		12	6	1.3
3001184*	Z-Ultimate 3000T White	**51 x 25**	6,360	**Available from ZipShip without a perf between labels as part number 76535**	12	6	1.4
880336-044	Z-Ultimate 3000T White	**51 x 44**	3,150		12	6	1.3
3013252-T	Z-Ultimate 3000T White	**51 x 51**	3,480		12	6	1.6
880336-057	Z-Ultimate 3000T White	**51 x 57**	2,486		12	6	1.2
76381	Z-Ultimate 3000T White	**51 x 76**	2,297		12	6	1.4
3013118-T	Z-Ultimate 3000T White	**51 x 102**	1,766		12	6	1.6
3012677-T	Z-Ultimate 3000T White	**51 x 152**	950		12	6	1.3
87568	Z-Ultimate 3000T White	**54 x 86**	2,169		12	6	1.8

***Perforation between labels**

^ Fanfold Pack

Return to Index

Z-Ultimate 3000T White (continued)
Core: 76mm / 3" Outside Diameter: 200mm / 8" (Unless specified otherwise)

Part Number	Material Name	Size W x H (mm)	Labels per Roll	Special Features	MOQ (Rolls)	Order in Multiples of	Weight / Roll (KG)
200903	Z-Ultimate 3000T White	**55 x 9**	14,500	**Square Corners**	15	5	1.6
3008733	Z-Ultimate 3000T White	**55 x 30**	5,370		12	6	1.5
3012396-T	Z-Ultimate 3000T White	**55 x 45**	3,888		15	5	1.7
880338-019	Z-Ultimate 3000T White	**57 x 19**	6,742		15	5	1.4
3003557	Z-Ultimate 3000T White	**57 x 44**	3,810		15	5	1.7
3015150-T	Z-Ultimate 3000T White	**57 x 44**	3,810	**With perforation**	15	5	1.7
3011472	Z-Ultimate 3000T White	**59 x 147**	1,227		16	8	1.7
87539	Z-Ultimate 3000T White	**60 x 30**	5,000		12	6	1.6
880340-019	Z-Ultimate 3000T White	**64 x 19**	6,742		12	6	1.6
76031	Z-Ultimate 3000T White	**64 x 44**	3,560		12	4	1.7
3015508-T*	Z-Ultimate 3000T White	**64 x 51**	3,560		12	4	1.7
3011367	Z-Ultimate 3000T White	**64 x 51**	3,430		12	4	1.8
3016097-T	Z-Ultimate 3000T White	**68 x 165**	1,100		12	4	2.1
3010768	Z-Ultimate 3000T White	**70 x 13**	11,260		12	4	2.1
3008861	Z-Ultimate 3000T White	**70 x 16**	9,560		12	4	1.9
3011103	Z-Ultimate 3000T White	**70 x 21**	7,775		12	4	2.0
880342-038	Z-Ultimate 3000T White	**70 x 38**	3,634		12	4	1.6
3006657	Z-Ultimate 3000T White	**70 x 51**	3,370		12	4	2.1
3001263	Z-Ultimate 3000T White	**70 x 127**	750	**Short roll length of 97M**	12	4	1.0
880344-031	Z-Ultimate 3000T White	**76 x 32**	4,240		12	6	1.9
3014204-T	Z-Ultimate 3000T White	**76 x 38**	3,634		12	6	1.9
3004608	Z-Ultimate 3000T White	**76 x 57**	3,010		12	4	2.1
3004253*	Z-Ultimate 3000T White	**76 x 76**	1,880	**Available from ZipShip without a perf between labels as part number 76015**	12	4	1.7
3010961	Z-Ultimate 3000T White	**76 x 102**	1,750		12	6	2.1
3005278	Z-Ultimate 3000T White	**76 x 258**	700		12	6	2.1
3007603	Z-Ultimate 3000T White	**80 x 14**	10,250		12	4	2.2
3007804	Z-Ultimate 3000T White	**80 x 40**	4,170		12	4	2.2
3014174-T	Z-Ultimate 3000T White	**80 x 85**	2,000		12	4	2.4
3014089-T*	Z-Ultimate 3000T White	**80 x 100**	1,767		12	4	2.5
3012330	Z-Ultimate 3000T White	**80 x Cont**	1	**Continuous**	12	6	2.5
3004723	Z-Ultimate 3000T White	**83 x 25**	6,360		12	6	14.2
76846	Z-Ultimate 3000T White	**84 x 8**	12,500		12	4	1.8
3011558*	Z-Ultimate 3000T White	**85 x 32**	5,240		12	6	2.4
3005142	Z-Ultimate 3000T White	**90 x 25**	6,360		12	6	2.5
76301	Z-Ultimate 3000T White	**90 x 38**	4,418		12	6	2.5
76801	Z-Ultimate 3000T White	**92 x Cont**	1	**Continuous**	12	6	2.0

***Perforation between labels**

^ Fanfold Pack

Return to Index

Z-Ultimate 3000T White (continued)
Core: 76mm / 3" Outside Diameter: 200mm / 8" (Unless specified otherwise)

Part Number	Material Name	Size W x H (mm)	Labels per Roll	Special Features	MOQ (Rolls)	Order in Multiples of	Weight / Roll (KG)
3007259	Z-Ultimate 3000T White	**99 x 39**	4,400		12	6	3.0
3011352	Z-Ultimate 3000T White	**100 x 30**	5,621		12	6	2.8
3002485	Z-Ultimate 3000T White	**100 x Cont**	1	**Continuous**	12	6	2.7
880350-012	Z-Ultimate 3000T White	**102 x 13**	11,664		12	4	3.1
880350-031	Z-Ultimate 3000T White	**102 x 32**	4,240		12	6	2.5
3011097	Z-Ultimate 3000T White	**102 x 38**	4,493		12	6	2.9
3003636	Z-Ultimate 3000T White	**102 x 70**	2,510		12	6	2.8
880350-076	Z-Ultimate 3000T White	**102 x 76**	1,890		12	6	2.3
3009537-T	Z-Ultimate 3000T White	**102 x 83**	2,140		12	6	2.8
880350-127	Z-Ultimate 3000T White	**102 x 127**	1,152		12	6	2.3
3009935-T*	Z-Ultimate 3000T White	**102 x 152**	1,180	**Available from ZipShip without a perf between labels as part number 880350-152**	12	6	2.8
3004519	Z-Ultimate 3000T White	**102 x 165**	1,080		12	6	3.0
3010520	Z-Ultimate 3000T White	**102 x 203**	890		12	6	2.8
3010138-T	Z-Ultimate 3000T White	**102 x Cont**	1	**Continuous**	12	4	2.7
76356	Z-Ultimate 3000T White	**127 x 64**	2,735		12	4	3.5
76349	Z-Ultimate 3000T White	**127 x Cont**	1	**Continuous**	12	4	2.8
3013374-T	Z-Ultimate 3000T White	**130 x 20**	8,331		12	4	3.9
3005536	Z-Ultimate 3000T White	**140 x 203**	880		12	4	3.8
3011780-T	Z-Ultimate 3000T White	**160 x 25**	6,571		12	4	4.9
3010240	Z-Ultimate 3000T White	**170 x 110**	1,630		12	2	4.7
3010241	Z-Ultimate 3000T White	**175 x 254**	710		12	1	4.8
3009647-T	Z-Ultimate 3000T White	**210 x 299**	610		12	2	5.8
3003239	Z-Ultimate 3000T White	**215 x Cont**	1	**Continuous**	12	2	5.7
3012331	Z-Ultimate 3000T White	**220 x Cont**	1	**Continuous**	12	2	6.6

***Perforation between labels**

^ Fanfold Pack

Return to Index

Z-Perform 1000D
Core: 25mm / 1" Outside Diameter: 127mm / 5" (Unless specified otherwise)

Item	Material Name	Size W x H (mm)	Labels per Roll	Special Features	Minimum Order Quantity (Rolls)	Order in Multiples of	Weight / Roll (KG)
3011387	Z-Perform 1000D	**24 x 11**	5,037		24	12	0.3
3004110	Z-Perform 1000D	**25 x 76**	960		24	12	0.3
3012789-T	Z-Perform 1000D	**29 x 33**	2,000		24	12	0.4
880169-012D	Z-Perform 1000D	**32 x 13**	4,650		24	12	0.4
880169-076D	Z-Perform 1000D	**32 x 76**	930		24	12	0.4
3003772-T	Z-Perform 1000D	**35 x 149**	480		24	12	0.4
3007189-T*	Z-Perform 1000D	**38 x 13**	5,050		24	12	0.5
880171-012D	Z-Perform 1000D	**38 x 13**	4,650		24	12	0.5
880171-019D	Z-Perform 1000D	**38 x 19**	3,300		24	12	0.5
880171-031D	Z-Perform 1000D	**38 x 32**	2,100		24	12	0.5
880595-076DU	Z-Perform 1000D	**38 x 76**	930		24	12	0.5
3005172-T	Z-Perform 1000D	**40 x 21**	3,200		24	12	0.5
3007678-T	Z-Perform 1000D	**40 x 25**	4,970	**Supplied 2 across**	24	12	0.9
3008503-T	Z-Perform 1000D	**40 x 25**	2,490		24	12	0.5
3012558-T	Z-Perform 1000D	**40 x 40**	1,675	**4.45mm gap between labels**	24	12	0.5
880173-012D	Z-Perform 1000D	**44 x 13**	4,650		24	12	0.5
880173-019D	Z-Perform 1000D	**44 x 19**	3,300		24	12	0.5
880173-082D	Z-Perform 1000D	**44 x 83**	860		24	12	0.5
3011447-T	Z-Perform 1000D	**45 x 25**	2,441		24	12	0.5
3012994-T	Z-Perform 1000D	**50 x 20**	3,234		24	12	0.6
3013222-T*	Z-Perform 1000D	**50 x 20**	3,350		24	12	0.6
3013290-T	Z-Perform 1000D	**50 x 215**	339	**4.075mm gap between labels**	24	12	0.6
880175-012D	Z-Perform 1000D	**51 x 13**	4,650		24	12	0.6
3006609*	Z-Perform 1000D	**51 x 25**	2,580		24	12	0.6
880175-025D	Z-Perform 1000D	**51 x 25**	2,580		24	12	0.6
3012230-T	Z-Perform 1000D	**51 x 34**	1,954		30	10	0.6
3008727-T	Z-Perform 1000D	**51 x 38**	1,730		24	12	0.6
3003392*	Z-Perform 1000D	**51 x 51**	1,410		24	12	0.6
3011661-T	Z-Perform 1000D	**51 x 76**	938		24	12	0.6
880599-101DU	Z-Perform 1000D	**51 x 102**	700		24	12	0.6
3012297-T*	Z-Perform 1000D	**51 x 165**	442		24	12	0.6
3010311-T*	Z-Perform 1000D	**53 x 30**	2,140		24	12	0.6
3011250-T*	Z-Perform 1000D	**57 x 32**	2,060		30	10	0.7

***Perforation between labels**

Return to Index

Z-Perform 1000D (continued)
Core: 25mm / 1" Outside Diameter: 127mm / 5" (Unless specified otherwise)

Item	Material Name	Size W x H (mm)	Labels per Roll	Special Features	Minimum Order Quantity (Rolls)	Order in Multiples of	Weight / Roll (KG)
3007899-T*	Z-Perform 1000D	**57 x 38**	1,720		30	10	0.7
880177-038D	Z-Perform 1000D	**57 x 38**	1,790		30	10	0.7
880601-063DU	Z-Perform 1000D	**57 x 64**	1,100		30	10	0.7
3005758	Z-Perform 1000D	**57 x 102**	730		30	10	0.7
3012746-T	Z-Perform 1000D	**60 x 50**	1,400		30	10	0.7
3009731-T	Z-Perform 1000D	**60 x Cont**	1	**Continuous**	30	10	0.7
880179-025D	Z-Perform 1000D	**64 x 25**	2,580		30	10	0.8
880179-031D	Z-Perform 1000D	**64 x 32**	2,100		30	10	0.8
3011409-T*	Z-Perform 1000D	**64 x 38**	1,743		30	10	0.7
3007146-T	Z-Perform 1000D	**65 x 35**	2,000		30	10	0.8
880181-025D	Z-Perform 1000D	**70 x 25**	2,580		24	12	0.8
880181-038D	Z-Perform 1000D	**70 x 38**	1,790		24	12	0.8
3009384-T	Z-Perform 1000D	**70 x 40**	1,650		24	12	0.8
3008285-T	Z-Perform 1000D	**76 x 16**	3,740		24	12	0.9
880183-019D	Z-Perform 1000D	**76 x 19**	3,300		24	12	0.9
880607-025DU	Z-Perform 1000D	**76 x 25**	2,580		24	12	0.9
3011553-T	Z-Perform 1000D	**76 x 29**	2,136		24	12	0.8
880183-031D	Z-Perform 1000D	**76 x 32**	2,100		24	12	0.9
3010065-T*	Z-Perform 1000D	**76 x 38**	1,730		24	12	0.8
880183-063D	Z-Perform 1000D	**76 x 64**	1,100		24	12	0.9
3006553-T	Z-Perform 1000D	**76 x 102**	730		24	12	0.9
3012177-T*	Z-Perform 1000D	**76 x 102**	710		24	12	0.9
880183-127D	Z-Perform 1000D	**76 x 127**	565		24	12	0.9
3012578-T*	Z-Perform 1000D	**76 x 127**	571		24	8	0.9
3005170-T*	Z-Perform 1000D	**76 x 152**	490		24	12	0.9
3009629-T	Z-Perform 1000D	**80 x 85**	810		24	12	0.9
3006834-T	Z-Perform 1000D	**80 x 148**	510		24	12	1.0
3013375-T	Z-Perform 1000D	**80 x 195**	372	**5.025mm gap between labels**	24	12	1.0
3012236-T	Z-Perform 1000D	**80 x Cont**	1	**Continuous**	24	6	1.0
880185-031D	Z-Perform 1000D	**83 x 32**	2,100		24	12	1.0
3007695-1T	Z-Perform 1000D	**83 x 38**	1,720		24	12	0.9
880185-044D	Z-Perform 1000D	**83 x 44**	1,550		24	12	1.0
880185-050D	Z-Perform 1000D	**83 x 51**	1,370		24	12	1.0

***Perforation between labels**

Return to Index

Z-Perform 1000D (continued)
Core: 25mm / 1" Outside Diameter: 127mm / 5" (Unless specified otherwise)

Item	Material Name	Size W x H (mm)	Labels per Roll	Special Features	Minimum Order Quantity (Rolls)	Order in Multiples of	Weight / Roll (KG)
3004817	Z-Perform 1000D	**89 x 25**	2,670		24	12	1.1
880187-031D	Z-Perform 1000D	**89 x 32**	2,100		24	12	1.0
880187-038D	Z-Perform 1000D	**89 x 38**	1,790		24	12	1.1
3004032	Z-Perform 1000D	**89 x 51**	1,410		24	12	1.1
3010789-T	Z-Perform 1000D	**90 x 53**	1,280		24	12	1.0
3009812-T	Z-Perform 1000D	**90 x Cont**	1	**Continuous**	24	12	1.0
3004329	Z-Perform 1000D	**95 x 64**	1,140		24	12	1.2
3010733-T	Z-Perform 1000D	**96 x 16**	3,740		24	6	1.1
3007266-T	Z-Perform 1000D	**100 x 50**	1,410		24	12	1.2
3007238-T	Z-Perform 1000D	**100 x 110**	310		24	12	0.6
3008205-1T	Z-Perform 1000D	**100 x 125**	560		24	12	1.1
3007766-T*	Z-Perform 1000D	**100 x 210**	330		24	12	1.1
3008031-T*	Z-Perform 1000D	**102 x 19**	3,200		24	12	1.2
3003482	Z-Perform 1000D	**102 x 25**	2,670		24	12	1.2
3011818-T	Z-Perform 1000D	**102 x 35**	1,954		24	6	1.2
3003372*	Z-Perform 1000D	**102 x 51**	1,410		24	12	1.2
880191-050D	Z-Perform 1000D	**102 x 51**	1,370		24	12	1.2
880191-063D	Z-Perform 1000D	**102 x 64**	1,100		24	12	1.2
3006610-T*	Z-Perform 1000D	**102 x 102**	730	**Available without the perforation between labels from ZipShip as part number 880191-101D.**	24	12	1.2
3007185-T	Z-Perform 1000D	**102 x 127**	500		24	12	1.1
3012178-T*	Z-Perform 1000D	**102 x 165**	442		24	12	1.2
3011363-T	Z-Perform 1000D	**102 x 170**	415		24	12	1.2
880191-177D	Z-Perform 1000D	**102 x 178**	405		24	12	1.2
3009724-T	Z-Perform 1000D	**102 x 192**	360		24	12	1.1
3003623	Z-Perform 1000D	**102 x 203**	370		24	12	1.2
3013497-T	Z-Perform 1000D	**102 x Cont**	1	**Continuous**	24	12	1.2
3003034	Z-Perform 1000D	**104 x 20**	3,430		24	12	1.3
3007689-T	Z-Perform 1000D	**105 x 17**	3,510		24	6	1.2
3007558-T	Z-Perform 1000D	**105 x 162**	430		24	12	1.2
3009479-T	Z-Perform 1000D	**105 x 251**	280		24	12	1.2

***Perforation between labels**

Return to Index

Z-Perform 1000D Removable
Core: 25mm / 1" Outside Diameter: 127mm / 5" (Unless specified otherwise)

Item	Material Name	Size W x H (mm)	Labels per Roll	Special Features	Minimum Order Quantity (Rolls)	Order in Multiples of	Weight / Roll (KG)
880665-076DU	Z-Perform 1000D Removable	**32 x 76**	930		24	12	0.4
3012759-T	Z-Perform 1000D Removable	**40 x 40**	1,710	**Non-standard gap back of 4.45mm**	24	12	0.5
880381-019D	Z-Perform 1000D Removable	**44 x 19**	3,300		24	12	0.5
880381-025D	Z-Perform 1000D Removable	**44 x 25**	2,580		24	12	0.5
880671-025DU	Z-Perform 1000D Removable	**51 x 25**	2,580		24	12	0.6
3012885-T*	Z-Perform 1000D Removable	**64 x 38**	1,743		30	10	0.8
3013468-T	Z-Perform 1000D Removable	**70 x 40**	1,807		24	12	0.9
880677-044DU	Z-Perform 1000D Removable	**70 x 44**	1,550		24	12	0.8
3003231	Z-Perform 1000D Removable	**70 x 57**	1,000		24	12	0.7
3010231-T	Z-Perform 1000D Removable	**75 x 55**	1,200		24	12	0.8
3013563-T	Z-Perform 1000D Removable	**76 x 25**	2,660		24	12	0.9
3011576-T	Z-Perform 1000D Removable	**76 x 51**	1,408		24	12	0.9
880395-050D	Z-Perform 1000D Removable	**89 x 51**	1,370		24	12	1.1
3010210-T	Z-Perform 1000D Removable	**102 x 38**	1,690		24	12	1.1
880399-050D	Z-Perform 1000D Removable	**102 x 51**	1,370		24	12	1.2
880399-063D	Z-Perform 1000D Removable	**102 x 64**	1,100		24	12	1.2
3010739-T	Z-Perform 1000D Removable	**102 x 76**	880		24	12	1.1
3008069-T	Z-Perform 1000D Removable	**102 x 102**	670		24	12	1.1
880399-127D	Z-Perform 1000D Removable	**102 x 127**	565		24	12	1.2
3007350-T	Z-Perform 1000D Removable	**102 x 152**	450		24	12	1.1

***Perforation between labels**

Return to Index

Z-Perform 1000T

Core: 25mm / 1" Outside Diameter: 127mm / 5" (Unless specified otherwise)

Item	Material Name	Size W x H (mm)	Labels per Roll	Special Features	Minimum Order Quantity (Rolls)	Order in Multiples of	Weight / Roll (KG)
3005848	Z-Perform 1000T	**21 x 21**	6,620	**Supplied 2 across**	24	12	0.6
3006758	Z-Perform 1000T	**23 x 23**	12,580	**Supplied 4 across**	24	12	1.2
3008839	Z-Perform 1000T	**24 x 19**	3,610		24	12	0.3
86986	Z-Perform 1000T	**25 x 13**	4,500		24	12	0.3
3013221	Z-Perform 1000T	**25 x 18**	3,948		24	12	0.4
3004076	Z-Perform 1000T	**25 x 38**	1,880		24	12	0.3
3013453-T	Z-Perform 1000T	**29 x 10**	6,341		24	12	0.4
3002961	Z-Perform 1000T	**29 x 13**	4,900		24	12	0.4
3001645	Z-Perform 1000T	**30 x 51**	1,440		28	14	0.4
880001-012D	Z-Perform 1000T	**32 x 13**	4,650		24	12	0.4
880001-019D	Z-Perform 1000T	**32 x 19**	3,300		24	12	0.4
880003-012D	Z-Perform 1000T	**38 x 13**	4,650		28	14	0.5
3012373-T	Z-Perform 1000T	**38 x 18**	4,024		24	12	0.5
3012140-T	Z-Perform 1000T	**38 x 19**	7,473	**Supplied 2 across**	24	12	1.0
880403-019DU	Z-Perform 1000T	**38 x 19**	3,300		24	12	0.5
3006648-T	Z-Perform 1000T	**38 x 28**	2,560		24	12	0.5
880003-031D	Z-Perform 1000T	**38 x 32**	2,100		24	12	0.5
3004382PI-T	Z-Perform 1000T	**39 x 25**	2,720		24	12	0.5
3009001-T	Z-Perform 1000T	**40 x 21**	3,370		24	12	0.5
3009003-T	Z-Perform 1000T	**40 x 30**	2,400		24	12	0.5
3002109	Z-Perform 1000T	**40 x 50**	1,480		24	12	0.5
880005-019D	Z-Perform 1000T	**44 x 19**	3,300		24	12	0.5
880005-025D	Z-Perform 1000T	**44 x 25**	2,580		24	12	0.5
880005-031D	Z-Perform 1000T	**44 x 32**	2,100		24	12	0.5
880005-050D	Z-Perform 1000T	**44 x 51**	1,370		24	12	0.5
3008910-T	Z-Perform 1000T	**44 x 83**	860		24	12	0.5
880405-095DU	Z-Perform 1000T	**44 x 95**	750		24	12	0.5
3004190-T	Z-Perform 1000T	**50 x 26**	2,720		24	12	0.6
880007-012D	Z-Perform 1000T	**51 x 13**	4,650		24	12	0.6
880007-019D	Z-Perform 1000T	**51 x 19**	3,300		24	12	0.6
87874*	Z-Perform 1000T	**51 x 25**	2,428		24	12	0.6
3004385PI-T	Z-Perform 1000T	**51 x 32**	2,230		24	12	0.6
880007-038D	Z-Perform 1000T	**51 x 38**	1,790		24	12	0.6
3007394-1T	Z-Perform 1000T	**51 x 51**	1,490		24	12	0.7
880007-076D	Z-Perform 1000T	**51 x 76**	930		24	12	0.6
3004954	Z-Perform 1000T	**55 x 30**	2,400		30	10	0.7
880009-025D	Z-Perform 1000T	**57 x 25**	2,580		30	10	0.7
800292-125*	Z-Perform 1000T	**57 x 32**	2,100	**Available without the perforation between labels from ZipShip as part number 880409-031DU**	30	10	0.7
880009-038D	Z-Perform 1000T	**57 x 38**	1,790		30	10	0.7
3007982-T	Z-Perform 1000T	**58 x 38**	1,940		30	10	0.7
86223	Z-Perform 1000T	**60 x 22**	2,500		30	10	0.6

***Perforation between labels**

Return to Index

Z-Perform 1000T
Core: 25mm / 1" Outside Diameter: 127mm / 5" (Unless specified otherwise)

Item	Material Name	Size W x H (mm)	Labels per Roll	Special Features	Minimum Order Quantity (Rolls)	Order in Multiples of	Weight / Roll (KG)
3006028-T	Z-Perform 1000T	**60 x 30**	2,400		30	10	0.8
86110	Z-Perform 1000T	**60 x 39**	1,630		30	10	0.7
880411-031DU	Z-Perform 1000T	**64 x 32**	2,100		30	10	0.7
3002496*	Z-Perform 1000T	**64 x 38**	1,880		30	10	0.8
880011-038D	Z-Perform 1000T	**64 x 38**	1,790		30	10	0.7
880411-101DU	Z-Perform 1000T	**64 x 102**	700		30	10	0.7
3011355-T	Z-Perform 1000T	**65 x 25**	2,906		30	10	0.9
880013-025D	Z-Perform 1000T	**70 x 25**	2,580		24	12	0.8
3007519-T	Z-Perform 1000T	**70 x 32**	2,300		24	12	0.9
3001080	Z-Perform 1000T	**70 x 37**	2,000		24	12	0.9
880013-044D	Z-Perform 1000T	**70 x 44**	1,550		24	12	0.8
3014042-T	Z-Perform 1000T	**74 x 210**	390		24	12	1.0
3004553	Z-Perform 1000T	**75 x 22**	2,500		24	12	0.7
3001163	Z-Perform 1000T	**75 x 37**	1,960		24	12	0.9
880015-025D	Z-Perform 1000T	**76 x 25**	2,580		24	12	0.9
880015-031D	Z-Perform 1000T	**76 x 32**	2,100		24	12	0.9
3007636-T	Z-Perform 1000T	**76 x 35**	2,100		24	12	1.0
3002335*	Z-Perform 1000T	**76 x 38**	1,880		24	12	0.9
880015-038D	Z-Perform 1000T	**76 x 38**	1,790		24	12	0.9
880015-044D	Z-Perform 1000T	**76 x 44**	1,550		24	12	0.9
800293-205*	Z-Perform 1000T	**76 x 51**	1,370		24	12	0.9
880015-050D	Z-Perform 1000T	**76 x 51**	1,370		24	12	0.9
880015-076D	Z-Perform 1000T	**76 x 76**	930		24	12	0.9
3008906-T	Z-Perform 1000T	**76 x 102**	770		24	12	1.0
3005731-T	Z-Perform 1000T	**76 x 127**	620		24	12	1.0
3011332-T	Z-Perform 1000T	**76 x 152**	506		24	12	1.0
3012625-T	Z-Perform 1000T	**76 x Cont**	1	**Continuous**	24	12	1.0
3013043-T	Z-Perform 1000T	**80 x 17**	4,103		24	12	1.1
3013126-T	Z-Perform 1000T	**80 x 195**	415	**5.025mm gap between labels**	24	12	1.1
880017-031D	Z-Perform 1000T	**83 x 32**	2,100		24	12	1.0
3004748	Z-Perform 1000T	**83 x 38**	1,880		24	12	1.0
3005476*	Z-Perform 1000T	**83 x 38**	1,880		24	12	1.0
880017-044D	Z-Perform 1000T	**83 x 45**	1,550		24	12	1.0
880017-076D	Z-Perform 1000T	**83 x 76**	930		24	12	1.0
87866	Z-Perform 1000T	**83 x 140**	485		24	12	0.9
3009179-T*	Z-Perform 1000T	**85 x 55**	1,370		24	12	1.0
880019-025D	Z-Perform 1000T	**89 x 25**	2,580		24	12	1.0
880019-031D	Z-Perform 1000T	**89 x 32**	2,100		24	12	1.0

***Perforation between labels**

Z-Perform 1000T (continued)
Core: 25mm / 1" Outside Diameter: 127mm / 5" (Unless specified otherwise)

Return to Index

Item	Material Name	Size W x H (mm)	Labels per Roll	Special Features	Minimum Order Quantity (Rolls)	Order in Multiples of	Weight / Roll (KG)
880419-038DU	Z-Perform 1000T	**89 x 38**	1,790		24	12	1.0
880019-044D	Z-Perform 1000T	**89 x 44**	1,550		24	12	1.0
3006952-T	Z-Perform 1000T	**89 x 48**	1,580		24	12	1.1
3007226	Z-Perform 1000T	**89 x 51**	1,490		24	12	1.1
880019-088D	Z-Perform 1000T	**89 x 89**	800		24	12	1.0
3001552	Z-Perform 1000T	**89 x 203**	380		24	12	1.1
3009478-T	Z-Perform 1000T	**90 x 60**	1,230		24	12	1.1
3003469	Z-Perform 1000T	**95 x 32**	2,100		24	12	1.1
880021-063D	Z-Perform 1000T	**95 x 64**	1,100		24	12	1.1
3002270	Z-Perform 1000T	**100 x 70**	1,079		24	12	1.2
3013163-T	Z-Perform 1000T	**100 x 90**	901		24	12	1.3
3011251-T	Z-Perform 1000T	**100 x 150**	517	**Inside wound**	24	12	1.2
3013112-T	Z-Perform 1000T	**101 x Cont**	1	**Continuous**	24	12	1.3
880023-019D	Z-Perform 1000T	**102 x 19**	3,300		24	12	1.2
880023-025D	Z-Perform 1000T	**102 x 25**	2,580		24	12	1.2
880423-038DU	Z-Perform 1000T	**102 x 38**	1,790	**Available with a perforation between labels from ZipShip as part number 800294-155.**	24	12	1.1
3002765*	Z-Perform 1000T	**102 x 51**	1,440		24	12	1.2
3005461	Z-Perform 1000T	**102 x 51**	1,490		24	12	1.3
880023-076D	Z-Perform 1000T	**102 x 76**	930	**Available from ZipShip with a perf between labels as part number 800294-305**	24	12	1.1
880023-082D	Z-Perform 1000T	**102 x 83**	860		24	12	1.1
800294-505*	Z-Perform 1000T	**102 x 127**	565		24	12	1.2
3003728	Z-Perform 1000T	**102 x 203**	355		24	12	1.2
3005127	Z-Perform 1000T	**102 x 302**	260		24	12	1.3
3013056-T	Z-Perform 1000T	**103 x Cont**	1	**Continuous**	24	12	1.3
3007414-T*	Z-Perform 1000T	**104 x 30**	2,400		24	12	1.3

***Perforation between labels**

Return to Index

Z-Perform 1000T Removable

Core: 25mm / 1" Outside Diameter: 127mm / 5" (Unless specified otherwise)

Item	Material Name	Size W x H (mm)	Labels per Roll	Special Features	Minimum Order Quantity (Rolls)	Order in Multiples of	Weight / Roll (KG)
3009296-T	Z-Perform 1000T Removable	**15 x 40**	5,400	**Supplied 3 across**	24	12	0.5
3011028-T	Z-Perform 1000T Removable	**30 x 15**	3,920		24	12	0.4
3003739	Z-Perform 1000T Removable	**32 x 19**	3,400		24	12	0.4
3011094-T	Z-Perform 1000T Removable	**38 x 25**	2,580		24	12	0.5
3004465	Z-Perform 1000T Removable	**40 x 21**	3,170		24	12	0.5
880333-031D	Z-Perform 1000T Removable	**44 x 32**	2,100		24	12	0.5
3009906-T	Z-Perform 1000T Removable	**45 x 25**	2,650		24	12	0.5
3008021-T	Z-Perform 1000T Removable	**51 x 19**	3,220		24	12	0.6
880431-025DU	Z-Perform 1000T Removable	**51 x 24**	2,580		24	12	0.6
880431-038DU	Z-Perform 1000T Removable	**51 x 38**	1,790		24	12	0.6
3008139-T	Z-Perform 1000T Removable	**52 x 25**	2,000		24	12	0.5
880433-019DU	Z-Perform 1000T Removable	**57 x 19**	3,300		30	10	0.7
880337-031D	Z-Perform 1000T Removable	**57 x 32**	2,100		30	10	0.7
3012779-T*	Z-Perform 1000T Removable	**57 x 32**	2,100		30	10	0.7
3006184	Z-Perform 1000T Removable	**57 x 38**	1,740		30	10	0.7
3012249-T	Z-Perform 1000T Removable	**57 x 51**	1,550		25	5	0.8
3009709-T*	Z-Perform 1000T Removable	**61 x 25**	2,610		30	10	0.7
880341-025D	Z-Perform 1000T Removable	**70 x 25**	2,580		24	12	0.8
3007420-T	Z-Perform 1000T Removable	**70 x 30**	2,150		24	12	0.8
3008003-T	Z-Perform 1000T Removable	**70 x 32**	2,050		24	12	0.8
3011274-T*	Z-Perform 1000T Removable	**70 x 32**	2,161		24	12	0.9
3012948-T	Z-Perform 1000T Removable	**70 x 38**	2,027		24	12	1.0
3011034-T*	Z-Perform 1000T Removable	**75 x 37**	1,000	**4.275mm gap between labels. This item is available with a longer roll length and smaller box**	32	32	0.5
3010890-T*	Z-Perform 1000T Removable	**75 x 37**	1,810	**4.275mm gap between labels**	24	12	0.9
880343-038D	Z-Perform 1000T Removable	**76 x 38**	1,790		24	12	0.9

***Perforation between labels**

Return to Index

Z-Perform 1000T Removable (continued)

Core: 25mm / 1" Outside Diameter: 127mm / 5" (Unless specified otherwise)

Item	Material Name	Size W x H (mm)	Labels per Roll	Special Features	Minimum Order Quantity (Rolls)	Order in Multiples of	Weight / Roll (KG)
880343-050D	Z-Perform 1000T Removable	**76 x 51**	1,370		24	12	0.9
3013565-T	Z-Perform 1000T Removable	**80 x 60**	1,317		24	12	1.1
3008037-T	Z-Perform 1000T Removable	**88 x 23**	2,820		24	12	1.0
880347-050D	Z-Perform 1000T Removable	**89 x 51**	1,370		24	12	1.1
880351-031D	Z-Perform 1000T Removable	**102 x 32**	2,100		24	12	1.2
3006923	Z-Perform 1000T Removable	**102 x 38**	1,740		24	12	1.2
880447-050DU	Z-Perform 1000T Removable	**102 x 51**	1,370		24	12	1.2
3008495-T	Z-Perform 1000T Removable	**102 x 102**	680		24	12	1.2
3011180-T	Z-Perform 1000T Removable	**102 x 152**	485		24	12	1.2

Z-Ultimate 3000T White

Core: 25mm / 1" Outside Diameter: 127mm / 5" (Unless specified otherwise)

Item	Material Name	Size W x H (mm)	Labels per Roll	Special Features	Minimum Order Quantity (Rolls)	Order in Multiples of	Weight / Roll (KG)
3011418	Z-Ultimate 3000T White	**6 x 6**	8,855	**Non-Standard trims of 7.5mm**	12	12	0.3
87900	Z-Ultimate 3000T White	**6 x11**	20,000	**supplied 5 across**	20	10	0.4
3010759	Z-Ultimate 3000T White	**7 x 7**	8,760	**Non-Standard trims of 7mm Corner radius of 2.381mm**	12	12	0.3
3011330	Z-Ultimate 3000T White	**7 x 7**	8,760	**Non-Standard trims of 7mm Corner radius of 0.793mm**	12	12	0.3
3013028	Z-Ultimate 3000T White	**8 x 8**	7,590	**Non-Standard trims of 8.7mm**	12	12	0.3
3011528	Z-Ultimate 3000T White	**10 x 10**	6,641	**Non-Standard trims of 5.033mm**	12	12	0.3
3011767	Z-Ultimate 3000T White	**14 x 7**	8,174	**Non-standard trims of 2.55mm**	12	12	0.3
3015295	Z-Ultimate 3000T White	**15 x15**	4,427		12	12	0.2
3011771	Z-Ultimate 3000T White	**15 x 20**	3,542	**Non-standard trims of 2.025mm**	12	12	0.3
3003255	Z-Ultimate 3000T White	**17 x 9**	13,010	**Supplied 2 across**	12	12	0.5
3011150	Z-Ultimate 3000T White	**18 x 18**	3,864		12	12	0.3
3005519	Z-Ultimate 3000T White	**19 x 6**	8,670		12	12	0.3
3009761	Z-Ultimate 3000T White	**20 x 20**	3,760		12	12	0.3
3003855	Z-Ultimate 3000T White	**22 x 18**	3,930		12	12	0.3

***Perforation between labels**

Return to Index

Z-Ultimate 3000T White

Core: 25mm / 1" Outside Diameter: 127mm / 5" (Unless specified otherwise)

Item	Material Name	Size W x H (mm)	Labels per Roll	Special Features	Minimum Order Quantity (Rolls)	Order in Multiples of	Weight / Roll (KG)
3003322	Z-Ultimate 3000T White	**22 x 19**	3,720		20	10	0.3
3010803	Z-Ultimate 3000T White	**23 x 13**	4,040		12	12	0.3
3011268	Z-Ultimate 3000T White	**23 x 16**	4,427		12	12	0.3
3008212	Z-Ultimate 3000T White	**25 x 7**	7,340		12	12	0.3
3003253	Z-Ultimate 3000T White	**25 x 13**	5,200		12	12	0.3
3009284	Z-Ultimate 3000T White	**25 x 20**	3,540		12	12	0.3
3007156	Z-Ultimate 3000T White	**25 x 25**	2,890		12	12	0.3
3014631	Z-Ultimate 3000T White	**25 x 30**	2,530		12	12	0.4
3007949	Z-Ultimate 3000T White	**25 x 32**	2,330		12	12	0.3
86321	Z-Ultimate 3000T White	**25 x 51**	1,458		12	12	0.4
3012965	Z-Ultimate 3000T White	**25 x 100**	817		12	6	0.4
3005835	Z-Ultimate 3000T White	**25 x 197**	410		12	12	0.3
3014867-T	Z-Ultimate 3000T White	**28 x 7**	8,174		12	12	0.4
3014046-T	Z-Ultimate 3000T White	**29 x 15**	4,620		12	12	0.4
3005007	Z-Ultimate 3000T White	**30 x 15**	4,520		20	10	0.4
3008864	Z-Ultimate 3000T White	**30 x 20**	3,540	**Plastic Cores**	12	12	0.4
3007155	Z-Ultimate 3000T White	**30 x 25**	2,890	**Left and right margin = 2.5mm each. Total web width = 35mm**	12	12	0.4
3012362-T	Z-Ultimate 3000T White	**30 x 30**	2,530		12	12	0.4
3008632	Z-Ultimate 3000T White	**30 x Cont**	1	**Continuous**	12	12	0.4
3001223	Z-Ultimate 3000T White	**31 x 21**	3,470		12	12	0.4
3010662	Z-Ultimate 3000T White	**32 x 6**	6,000		12	12	0.3
3013869-T	Z-Ultimate 3000T White	**32 x 19**	3,795		12	12	0.5
3014882	Z-Ultimate 3000T White	**33 x 212**	390		12	12	0.5
3003185	Z-Ultimate 3000T White	**38 x 6**	8,670		12	12	1.0
880243-019D	Z-Ultimate 3000T White	**38 x 19**	3,300		12	12	0.4
880243-025D	Z-Ultimate 3000T White	**38 x 25**	2,580		12	12	0.4
3005558	Z-Ultimate 3000T White	**40 x 10**	6,310		12	12	0.5
3004945	Z-Ultimate 3000T White	**40 x 15**	4,520		12	12	0.6
3006716*	Z-Ultimate 3000T White	**40 x 15**	4,340	**Non-standard gap back of 4.233mm**	12	12	0.5
3002041	Z-Ultimate 3000T White	**40 x 20**	3,530		12	12	0.6
3010624	Z-Ultimate 3000T White	**40 x 25**	3,090		12	12	0.6
3013082-T	Z-Ultimate 3000T White	**40 x 30**	2,530		12	12	0.6

***Perforation between labels**

Return to Index

Z-Ultimate 3000T White (continued)

Core: 25mm / 1" Outside Diameter: 127mm / 5" (Unless specified otherwise)

Item	Material Name	Size W x H (mm)	Labels per Roll	Special Features	Minimum Order Quantity (Rolls)	Order in Multiples of	Weight / Roll (KG)
3010597	Z-Ultimate 3000T White	**40 x 40**	1,920		20	10	0.5
86359	Z-Ultimate 3000T White	**45 x 14**	4,730		12	12	0.6
3013208-T	Z-Ultimate 3000T White	**45 x 16**	4,427		12	12	0.7
3011017	Z-Ultimate 3000T White	**45 x 35**	2,190		12	12	0.6
3011334	Z-Ultimate 3000T White	**50 x 30**	2,530	**Square Corners**	12	12	0.7
3009593-T	Z-Ultimate 3000T White	**50 x 40**	1,930		12	12	0.7
3014668-T	Z-Ultimate 3000T White	**50 x 60**	1,328		12	12	0.7
3010576	Z-Ultimate 3000T White	**51 x 6**	8,760		12	12	0.7
86057	Z-Ultimate 3000T White	**51 x 10**	5,000	**Wound inside**	12	12	0.5
3006014*	Z-Ultimate 3000T White	**51 x 13**	4,550		12	12	0.6
880247-019D	Z-Ultimate 3000T White	**51 x 19**	3,300		12	12	0.6
3004897	Z-Ultimate 3000T White	**51 x 51**	1,550		12	12	0.6
3006623	Z-Ultimate 3000T White	**51 x 76**	1,040		12	12	0.7
3010636	Z-Ultimate 3000T White	**52 x 32**	2,390		12	12	0.7
3009783-T	Z-Ultimate 3000T White	**55 x 30**	2,500		12	12	0.7
3011242	Z-Ultimate 3000T White	**56 x 178**	466		20	10	0.7
880249-082D	Z-Ultimate 3000T White	**57 x 83**	860		20	10	0.7
3008900	Z-Ultimate 3000T White	**60 x 15**	4,570		12	12	0.8
3011376	Z-Ultimate 3000T White	**60 x 25**	2,951		15	15	0.9
3011104	Z-Ultimate 3000T White	**60 x 40**	1,992		15	5	0.9
3011721	Z-Ultimate 3000T White	**60 x 75**	1,084		12	12	0.9
3011368	Z-Ultimate 3000T White	**64 x 32**	2,100		12	12	0.7
3008582	Z-Ultimate 3000T White	**70 x 24**	3,070		12	4	1.0
3014614-T	Z-Ultimate 3000T White	**70 x 51**	1,562		12	12	1.0
3011605-T*	Z-Ultimate 3000T White	**70 x 150**	553	**Inside wound**	12	12	0.9
3010522	Z-Ultimate 3000T White	**70 x 200**	410		12	12	0.9
3009840-T	Z-Ultimate 3000T White	**73 x 25**	2,920		12	12	0.9
3013356-T	Z-Ultimate 3000T White	**75 x 150**	553		12	12	1.1
3001975	Z-Ultimate 3000T White	**76 x 19**	1,000		12	12	0.3
3007070	Z-Ultimate 3000T White	**76 x 38**	2,000		12	12	1.0
3013229-T	Z-Ultimate 3000T White	**76 x 102**	804		12	12	1.1

***perforation between labels**

Return to Index

Z-Perform Ultimate 3000T White (continued)

Core: 25mm / 1" Outside Diameter: 127mm / 5" (Unless specified otherwise)

Item	Material Name	Size W x H (mm)	Labels per Roll	Special Features	Minimum Order Quantity (Rolls)	Order in Multiples of	Weight / Roll (KG)
3010771	Z-Ultimate 3000T White	**76 x 203**	400		12	12	1.0
3013857-T	Z-Ultimate 3000T White	**77 x 10**	6,440		16	8	1.1
3003182	Z-Ultimate 3000T White	**79 x 33**	2,260		12	12	1.0
3012655-T	Z-Ultimate 3000T White	**80 x 30**	2,530		12	12	1.1
880257-025D	Z-Ultimate 3000T White	**83 x 25**	2,580		12	12	0.9
880259-025D	Z-Ultimate 3000T White	**90 x 25**	2,580		12	12	1.0
880259-031D	Z-Ultimate 3000T White	**90 x 32**	2,100		12	12	1.0
3006968	Z-Ultimate 3000T White	**100 x 150**	540		12	12	1.2
3011399	Z-Ultimate 3000T White	**100 x Cont**	1	**Continuous**	12	12	1.1
3007623	Z-Ultimate 3000T White	**102 x 13**	5,130		12	12	1.4
3001224	Z-Ultimate 3000T White	**102 x 25**	2,890		12	12	1.3
3010175	Z-Ultimate 3000T White	**102 x 38**	2,020		12	6	1.3
3010744*	Z-Ultimate 3000T White	**102 x 38**	2,020		12	12	1.3
3015392-T*	Z-Ultimate 3000T White	**102 x 38**	1,650		12	12	1.3
3006786	Z-Ultimate 3000T White	**102 x 45**	1,730		12	12	1.4
3013882-T*	Z-Ultimate 3000T White	**102 x 51**	1,562		12	12	1.4
3002376	Z-Ultimate 3000T White	**102 x 64**	1,240		12	12	1.4
3002085	Z-Ultimate 3000T White	**102 x 70**	1,140		12	12	1.3
880261-101D	Z-Ultimate 3000T White	**102 x 102**	700		12	12	1.2
3010459*	Z-Ultimate 3000T White	**102 x 127**	640		12	12	1.3
880261-152D	Z-Ultimate 3000T White	**102 x 152**	475		12	6	1.1
3015216-T	Z-Ultimate 3000T White	**104 x 30**	2,530		12	12	1.5

***perforation between labels**